FL-850/F1L-100
FL-850/F1L-100-S
Hardware Manual

Date published: December 2017 (4th Edition)
Tessera Technology Inc.

TABLE OF CONTENTS

1 Introduction

In this document, features and hardware specifications of FL-850/F1L-100, which the 32-bit single-chip microcomputer RH850/F1L-100 from Renesas Electronics Corporation is mounted, are described.

2 Features

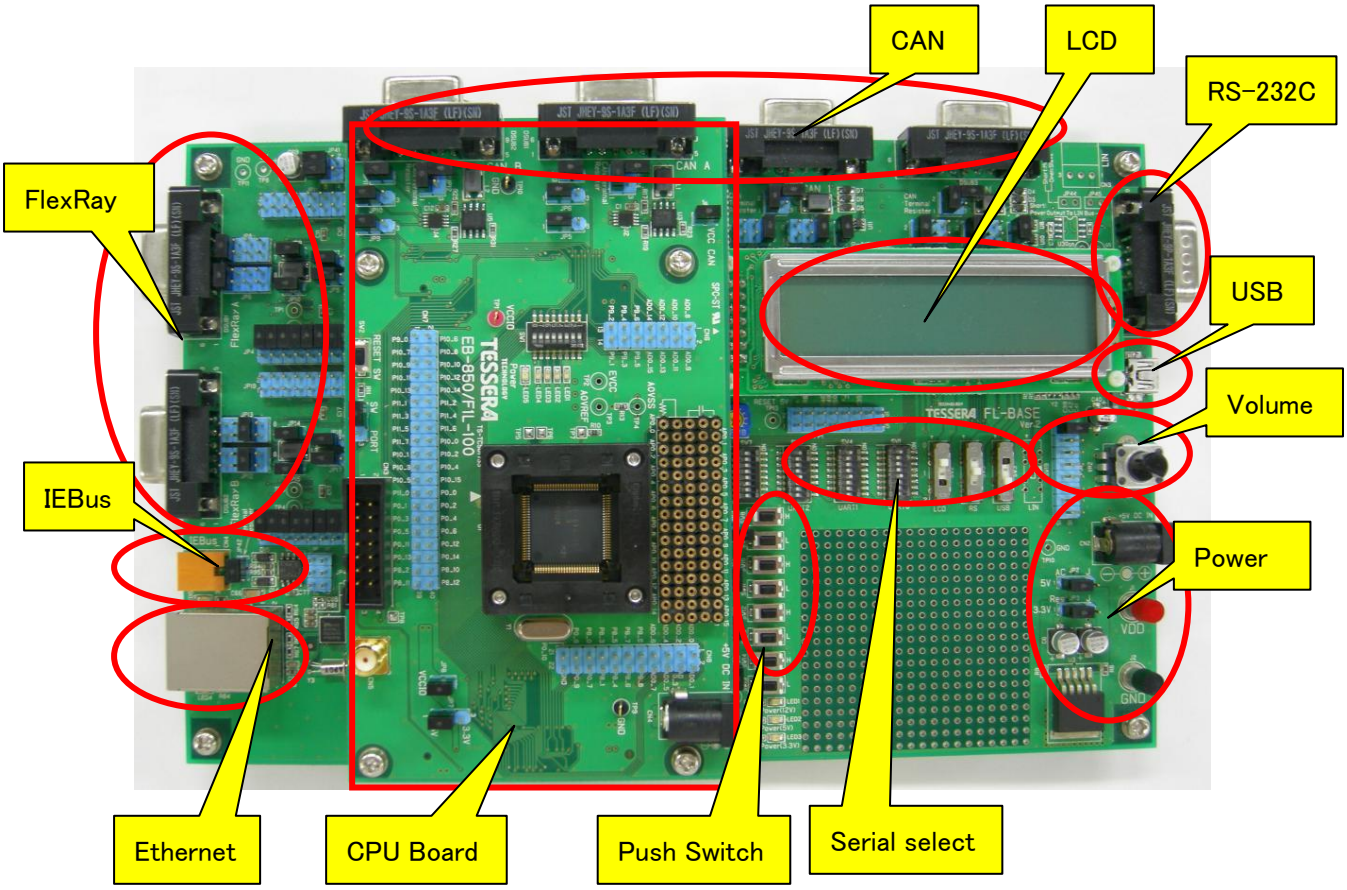
CAN
LCD
RS-232C
FlexRay
USB
Volume
IEBus
Power
Ethernet
CPU Board
Push Switch
Serial select

2.1 CAN

The CAN controller of the microcomputer is connected to the CAN transceiver (TJA1040). It supports CAN physical layer. Also, CAN bus signal is connected to DSUB 9pin female connector.

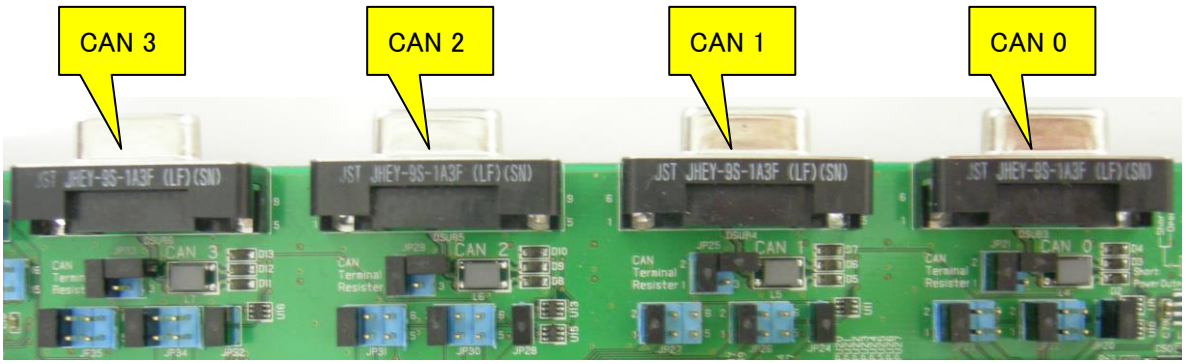

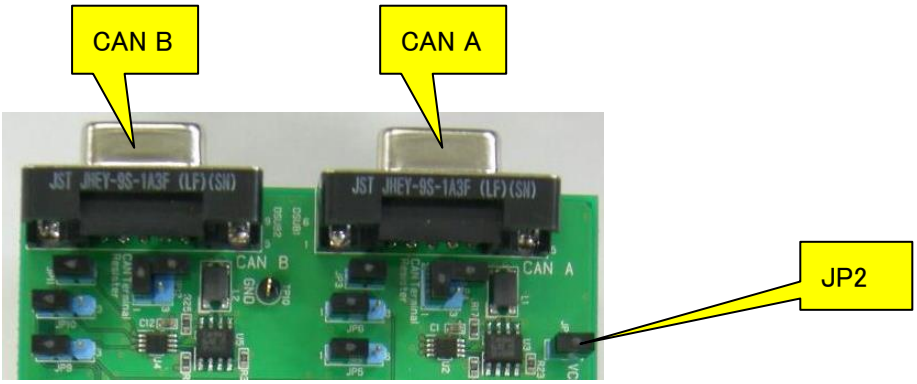

One terminal can be selected by using jumpers from maximum of three multipurpose terminals, and can be connected to CAN transceiver.

Only one line must be shorted in each jumper.

CAN A and CAN B is in CPU board. JP2 is a power supply jumper of the CAN transceiver. Be short-circuited usually.

Following table shows the connection of RH850/F1L.

		Jumper		Connecter
P10_1/TAUD0I3/TAUD0O3/CAN0TX/PWGA1O/TAPA0UN/CSIH1SC/MODE0	TxD	JP5	1-2	CANA
P0_0/TAUD0I2/TAUD0O2/RLIN20RX/CAN0TX/PWGA10O/CSIH0SSI/DPO/RESETOUT			2-3	
P10_0/TAUD0I1/TAUD0O1/CAN0RX/INTP0/CSCXFOUT/PWGA0O/TAPA0UP/CSIH1SI	RxD	JP6	1-2	
P0_1/TAUD0I4/TAUD0O4/CAN0RX/RLIN20TX/INTP0/PWGA11O/CSIH0SI/APO			2-3	
P9_1/INTP11/PWGA9O/TAUD0I2/TAUD0O2/KR0I5/CSIH2CSS1/ADCA0I3S	JP3	MODEA	Short	
P10_7/TAUD0I15/TAUD0O15/CSIG0SC/ENCA0TIN1/PWGA4O/CAN1TX	TxD	JP9	1-2	CANB
P0_3/TAUD0I8/TAUD0O8/RLIN30RX/CAN1TX/DPIN1/PWGA13O/CSIH0DCS/CSIH0SO/INTP10			2-3	
P10_6/TAUD0I13/TAUD0O13/CSIG0DCS/CSIG0SO/ENCA0TIN0/ADCA0SEL2/CAN1RX/INTP1	RxD	JP10	1-2	
P0_2/TAUD0I6/TAUD0O6/CAN1RX/RLIN30TX/PWGA12O/CSIH0SC/INTP1/DPO			2-3	
P9_2/KR0I6/PWGA20O/TAPA0ESO/CSIH2CSS2/ADCA0I9S	JP11	MODEB	Short	
P0_4/RLIN31RX/INTP11/CAN2TX/INTP11/PWGA10O/CSIH1SI/SELDP0/DPIN8	TxD	JP22	1-2	CAN0
			3-4	
			5-6	
P0_5/CAN2RX/INTP2/RLIN31TX/DPIN9/SELDP1/CSIH1DCS/CSIH1SO	RxD	JP23	1-2	
			3-4	
			5-6	
P9_3/KR0I7/PWGA21O/CSIH2CSS3/ADCA0I10S	JP20	MODE0	Short	
	TxD	JP26	1-2	CAN1
			3-4	
			5-6	
	RxD	JP27	1-2	
			3-4	
			5-6	
	JP24	MODE1	Short	
	TxD	JP30	1-2	CAN2
			3-4	
			5-6	
	RxD	JP31	1-2	
			3-4	
			5-6	
	JP28	MODE2	Short	
	TxD	JP34	1-2	CAN3
			3-4	
			5-6	
	RxD	JP35	1-2	
			3-4	
			5-6	
	JP32	MODE3	Short	
			Default	

JP21, JP25, JP29, JP33, JP4 and JP12 are termination resistor connect. Open or short these as needed.

		termination resistor
JP21:CAN 0 JP25:CAN 1	1-2 Short 3-4 Short	60Ω
JP29:CAN 2 JP33:CAN 3	1-2 Short 3-4 Open	120Ω
JP4 : CAN A JP12:CAN B	1-2 Open 3-4 Open	Non

CAN 0,1,2,3,A,B DSUB Connector	
Pin Number	Signal Name
1	N.C.
2	**CANL**
3	**GND**
4	N.C.
5	0.1uF
6	N.C.
7	**CANH**
8	N.C.
9	N.C.

2.2 FlexRay

RH850/F1L does not have FlexRay controller, therefore it cannot use FlexRay.

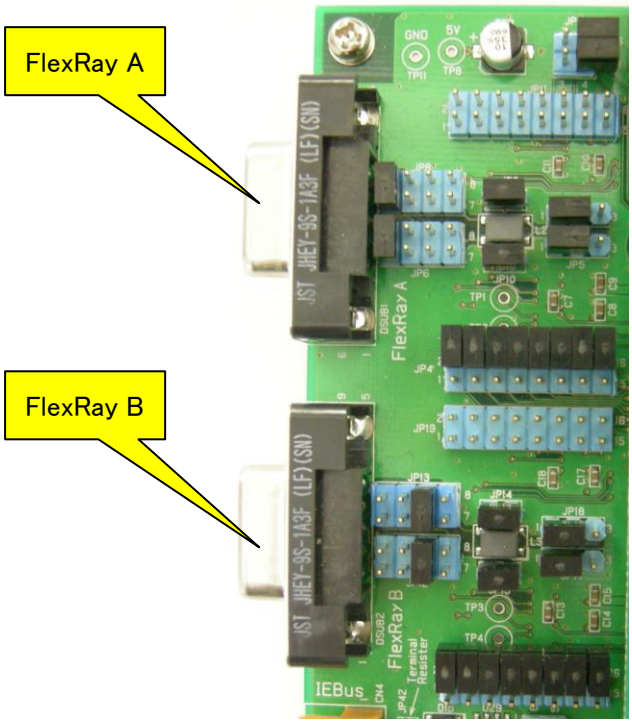

Default Settings

Jumper	Short
JP41	2
	4
JP11	All Open
JP8	1-2
JP6	1-2
JP9	1-2
JP10	1-2
JP7	1-2
JP5	1-2
JP4	2
	4
	6
	8
	10
	12
	14
	16

Jumper	Short
JP19	All Open
JP13	5-6
JP12	5-6
JP14	1-2
JP15	1-2
JP18	1-2
JP17	1-2
JP16	2
	4
	6
	8
	10
	12
	14
	16

Notes

These parts are not mounted in the product in December 2017 and afterwards.

2.3 IEBus

RH850/F1L does not have IEBus controller, therefore it cannot use IEBus.

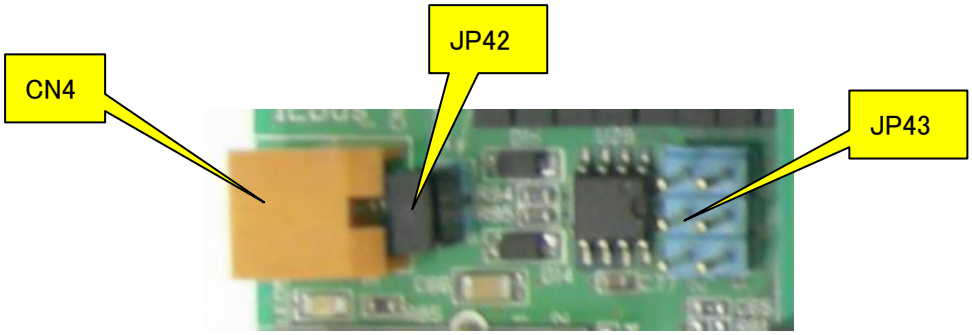

Default Settings JP43: Open

JP42: Short

CN4 Pin Number	Function Name
1	(+) Bus Output, (+) Receiver Input
2	GND
3	(−) Bus Output, (−) Receiver Input

Notes

These parts are not mounted in the product in 2014 and afterwards.

2.4 Ethernet

RH850/F1L does not have MAC controller, therefore it cannot use Ethernet.

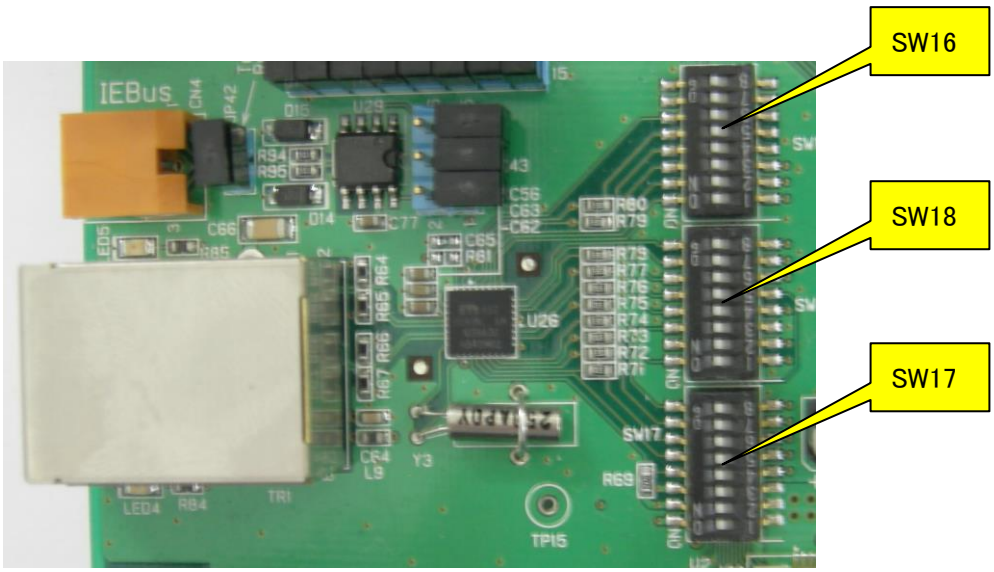

The function of Ethernet is not used, and make the following dip switches all turning off.

There is a possibility of breaking when turning it on.

- SW16 (Default OFF)
- SW17 (Default OFF)
- SW18 (Default OFF)

Notes

These parts are not mounted in the product in August, 2014 and afterwards.

2.5 Serial select

It can be connected by selecting the microcomputer's UART terminal to "LCD", "RS-232C", and "USB Serial Conversion".

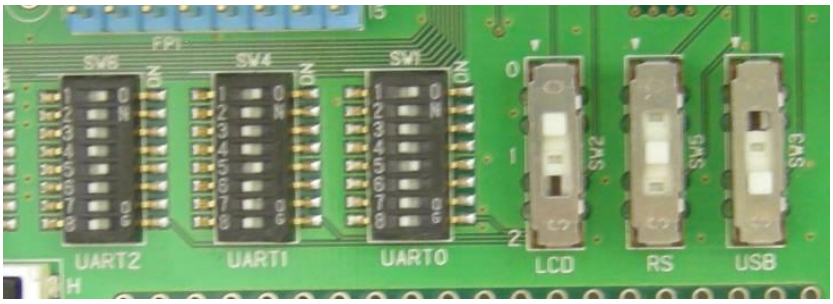

The terminals for using UART can be selected by DIP switch (SW1, SW4, and SW6).

※ Do not set multiple ON within a group.

		SW1		
P10_10/TAUD0I14/TAUD0O14/RLIN30TX/ENCA0BIN/PWGA7O/CSIH0CSS1	TxD	1	ON	UART0
P0_2/TAUD0I6/TAUD0O6/CAN1RX/RLIN30TX/PWGA12O/CSIH0SC/INTP1/DPO		2	OFF	
P11_5/INTP5/RLIN33TX/PWGA30O/CSIH3SI		3	OFF	
	N.C.	4	OFF	
P10_9/TAUD0I12/TAUD0O12/RLIN30RX/INTP10/ENCA0AIN/PWGA6O/CSIH0RYI/CSIH0RYO	RxD	5	ON	
P0_3/TAUD0I8/TAUD0O8/RLIN30RX/CAN1TX/DPIN1/PWGA13O/CSIH0DCS/CSIH0SO/INTP10		6	OFF	
P11_6/RLIN33RX/INTP13/PWGA31O/CSIH3DCS/CSIH3SO		7	OFF	
	N.C.	8	OFF	

		SW4		
P10_12/PWGA17O/RLIN31TX/CSIH1CSS1/TAUB0I3/TAUB0O3	TxD	1	ON	UART1
P0_5/CAN2RX/INTP2/RLIN31TX/DPIN9/SELDP1/CSIH1DCS/CSIH1SO		2	OFF	
		3	OFF	
	N.C.	4	OFF	
P10_11/PWGA16O/RLIN31RX/INTP11/CSIH1CSS0/TAUB0I1/TAUB0O1	RxD	5	ON	
P0_4/RLIN31RX/INTP11/CAN2TX/INTP11/PWGA10O/CSIH1SI/SELDP0/DPIN8		6	OFF	
		7	OFF	
	N.C.	8	OFF	

		SW6		
P10_14/PWGA19O/RLIN32TX/CSIH3SSI/TAUB0I7/TAUB0O7	TxD	1	ON	UART2
P0_14/RLIN32TX/PWGA47O/TAUB0I14/TAUB0O14/CSIG0SC		2	OFF	
		3	OFF	
	N.C.	4	OFF	
P10_13/CSIH0SSI/PWGA18O/RLIN32RX/INTP12/TAUB0I5/TAUB0O5	RxD	5	ON	
P0_13/RLIN32RX/INTP12/PWGA46O/TAUB0I12/TAUB0O12/CSIG0DCS/CSIG0SO/INTP5		6	OFF	
		7	OFF	
	N.C.	8	OFF	

The destination for UART can be selected by the slide switch (SW2, SW3, and SW5).

	Slide Switch	
SW2 LCD	0	UART0
	1	UART1
	2	UART2
SW5 RS-232C	0	UART0
	1	UART1
	2	UART2
SW3 USB Serial Conversion	0	UART0
	1	UART1
	2	UART2

2.5.1 LCD

Words can be displayed on LCD panel by sending data to UART that is connected to LCD. "Binary mode" to display hexadecimal and "ASCII mode" to display ASCII characters can be selected by the DIP switch (SW7).

Initial screen displays when you press the reset switch on CPU board.

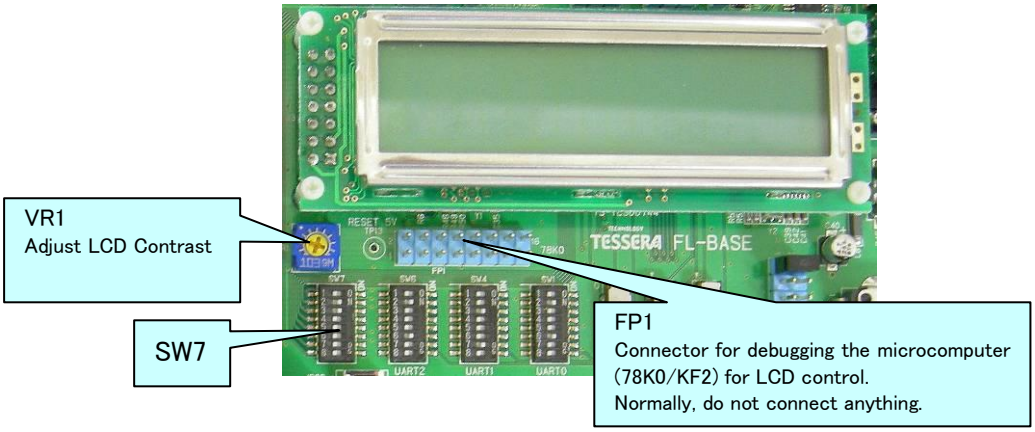

UART Communication Specifications

- Baud Rate 115.2Kbps (Fixed)
- Data Length 8bit (LSB First)
- Parity None
- Stop Bit 1bit
- Flow Control None (continuous transmission enabled)

Binary Mode 1 (SW7_1:ON, SW7_2:ON, SW7_3:Any)

It displays the hexadecimal data as sent with entering space between 1Byte data.

It can display 10Byte in 1 screen. It scrolls 1 line when it received 11Byte of data.

(example) URTH?TX = 0x01; TXWait();

URTH?TX = 0x02; TXWait();

.....

URTH?TX = 0x0A; TXWait();

0	1		0	2		0	3		0	4		0	5		
0	6		0	7		0	8		0	9		0	A		

URTH?TX = 0x10; TXWait();

0	6		0	7		0	8		0	9		0	A		
1	0														

(use case) By developing a program to send 10Byte once in 1 second, it will display the first 1Byte at the top-left of the screen.

Binary Mode 2 (SW7_1:ON, SW7_2:OFF, SW7_3:ON)

It displays the hexadecimal data as sent without entering space between 1Byte data.

It can display 16Byte in 1 screen. It scrolls 1 line when it received 17Byte of data.

(example) URTH?TX = 0x01; TXWait();

URTH?TX = 0x02; TXWait();

.....

URTH?TX = 0x10; TXWait();

0	1	0	2	0	3	0	4	0	5	0	6	0	7	0	8
0	9	0	A	0	B	0	C	0	D	0	E	0	F	1	0

URTH?TX = 0x11; TXWait();

0	9	0	A	0	B	0	C	0	D	0	E	0	F	1	0
1	1														

(use case) By developing a program to send 16Byte once in 1 second, it will display the first 1Byte at the top-left of the screen.

ASCII Mode Ver.2 (SW7_1:OFF, SW7_2:Any, SW7_3:Any)

It displays the characters as sent.

It can display 16 characters in 1 line. It scrolls 1 line when it received 17th character or linefeed code (0x0D: ¥r).

(example) URTH?TX = 'F'; TXWait();

URTH?TX = 'l'; TXWait();

・・・・・・・・・・

URTH?TX = 'T'; TXWait();

F	l	e	x	R	a	y								
T	E	S	T											

URTH?TX = '¥r'; TXWait();

URTH?TX = '1'; TXWait();

T	E	S	T											
1														

The position of the cursor can be specified by sending xy-coordinate right after ESC code (0x1B).

ESC(0x1B) + xy x: 0(0x30)～9(0x39),a(0x61), b, c, d, e, f(0x66)

y: 0(0x30),1(0x31)

(example) printf(buf, "¥x1b00TEST¥x1ba1LCD");

y ↓																
0	T	E	S	T												
1											L	C	D			
X →	0	1	2	3	4	5	6	7	8	9	a	b	c	d	e	f

2.5.2 RS-232C

UART that is connected to "RS-232C" can send and receive signals with the RS-232C level of D-SUB9 pin connector.

Use a cross cable when you connect to PC.

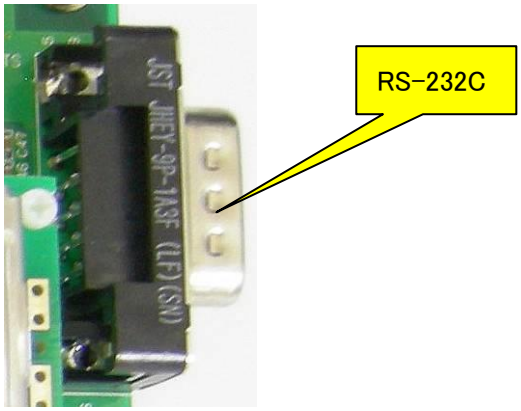

RS-232C D-SUB Connector	
Pin Number	Signal
1	N.C.
2	**RxD**
3	**TxD**
4	N.C.
5	GND
6	N.C.
7	RTS(N.C.)
8	CTS(N.C.)
9	N.C.

2.5.3 USB Serial Conversion

UART that is connected to "USB serial conversion" can communicate with the COM port of PC through USB microcomputer (uPD78F0730).

USB driver is stored in the same media as this manual. When you encountered a warning "Windows Logo Test" while installing the USB driver, please select "Continue".

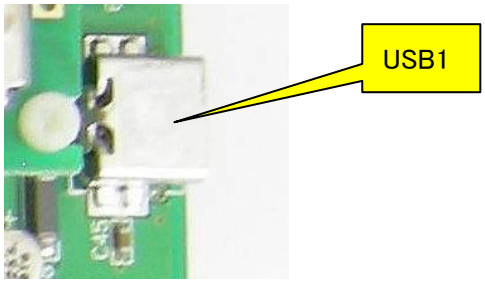

Recommended UART communication specification

- Baud rate 115.2Kbps
- Data length 8bit (LSB First)
- Parity None
- Stop Bit 1bit
- Flow Control None

2.6 Push Switch

4 interrupt signals can be connected to microcomputer's interrupt terminals. The signal can be set to High by pressing H button, and to Low by pressing L button. It becomes High by reset signal of the CPU.

Also, it has chattering prevention circuit.

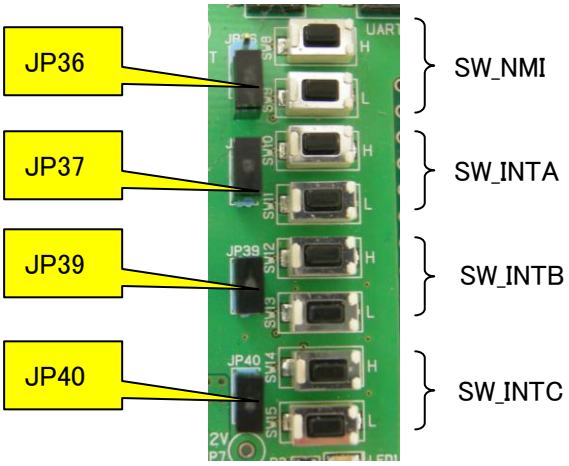

The interrupt signals are disconnected by taking each jumper pin out.

	Jumper	Switch	Signal
P9_0/NMI/PWGA8O/TAUD0I0/TAUD0O0/ADCA0TRG0/CSIH2CSS0/KR0I4/ADCA0I2S	JP36:Open	SW8/9	SW_NMI
P0_6/INTP2/DPIN10/SELDP2/CSIH1SC	JP37: Short	SW10/11	SW_INTA
P11_7/INTP5/PWGA32O/CSIH3SC	JP39: Short	SW12/13	SW_INTB
P8_0/TAUJ0I0/TAUJ0O0/DPIN2/PWGA14O/INTP4/CSIH0CSS0/ADCA0I0S	JP40: Short	SW14/15	SW_INTC

2.7 Volume

It can output variable voltage (0V-IO voltage) to A/D terminal of CPU by variable resistor of 10KΩ.

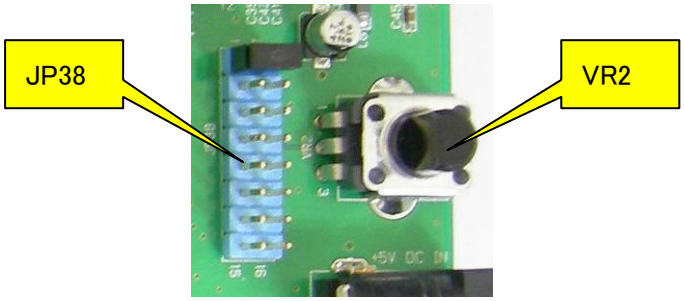

	JP38
AP0_0/ADCA0I0	1-2
AP0_1/ADCA0I1	3-4
AP0_2/ADCA0I2	5-6
AP0_3/ADCA0I3	7-8
AP0_4/ADCA0I4	9-10
AP0_5/ADCA0I5	11-12
AP0_6/ADCA0I6	13-14
AP0_7/ADCA0I7	15-16

2.8 Power

Connect bundled AC adapter (+5V) to AC Jack. You do not need to connect to the AC Jack on the CPU board.

It generates the power of +12V for FlexRay driver and +3.3V for Ethernet PHY chip power from this power supply with using regulator.

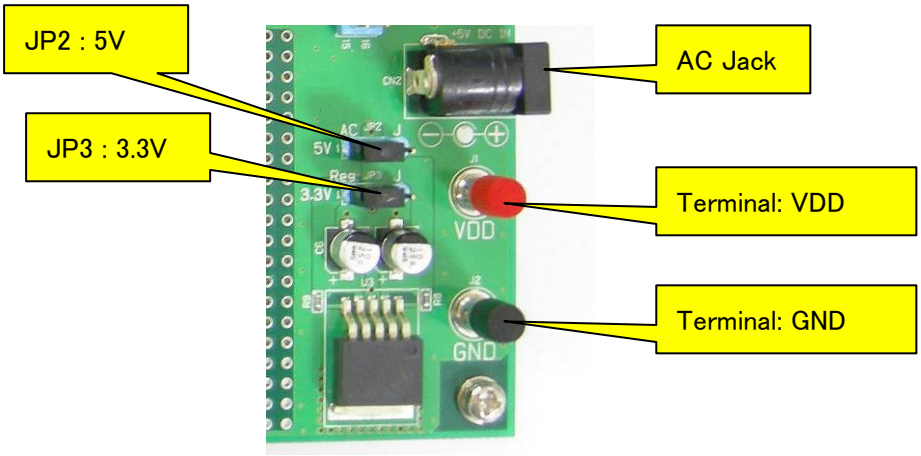

Power supply source can be changed by JP2 and JP3.

JP2	1-2	AC adapter
5V	2-3	Terminal
JP3	1-2	Regulator
3.3V	2-3	Terminal

JP1 is the jumper to fix the IO voltage when it does not connect CPU board. Normally, do not short this.

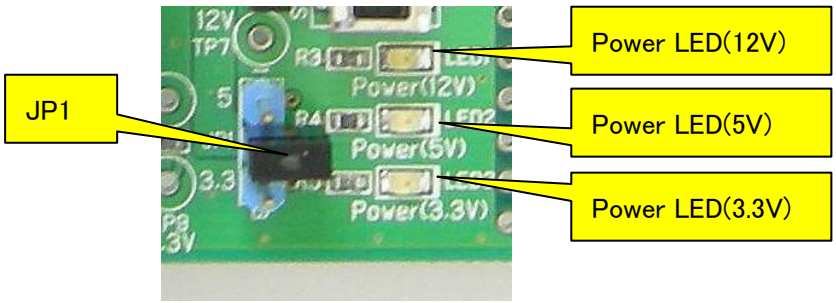

2.9 CPU Board

One of "EB-850/F1L-100" or "EB-850/F1L-100-S" is mounted on the CPU board

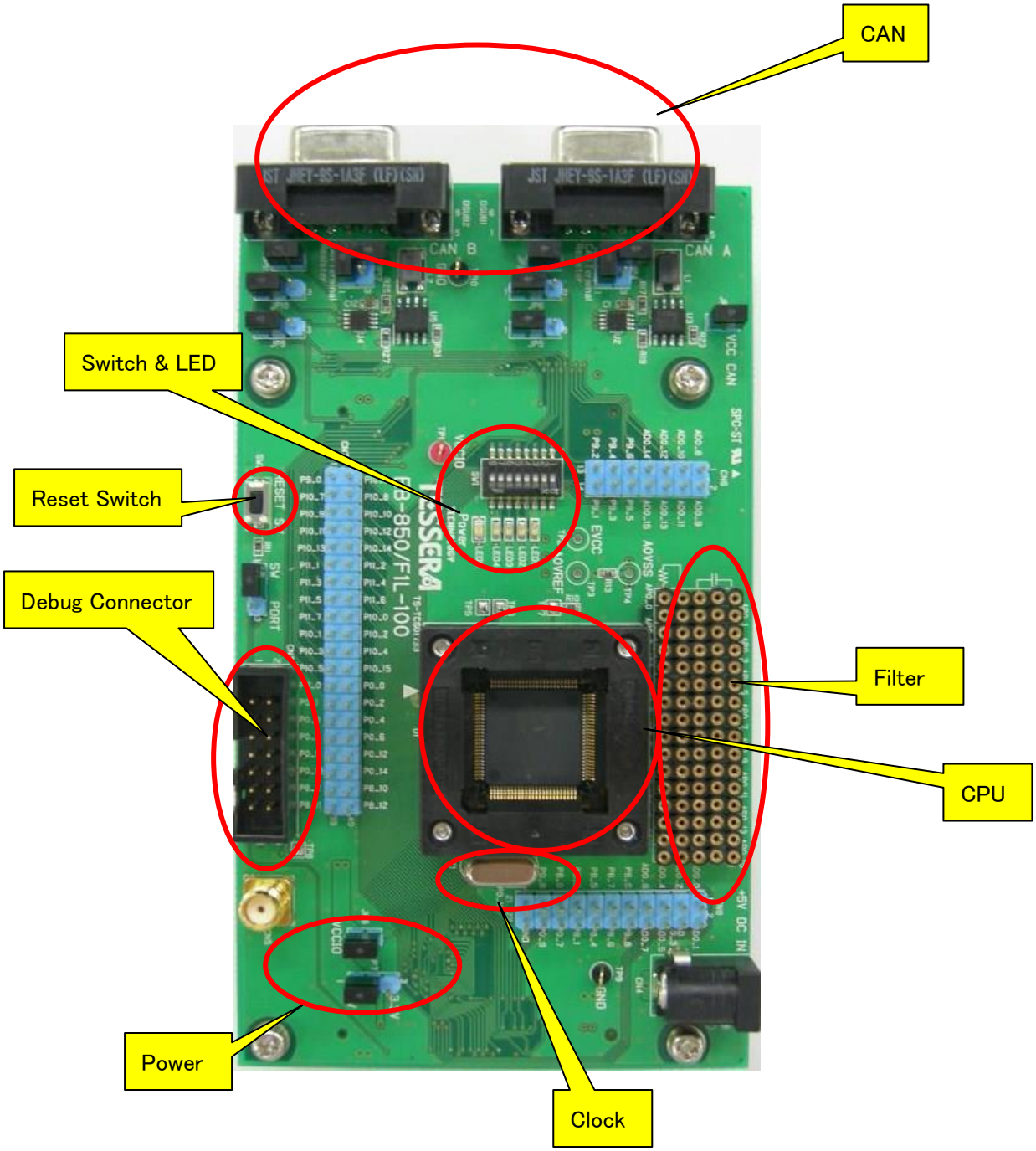

2.9.1 Power

There is a jumper pin for measuring the current when you use only CPU board itself.

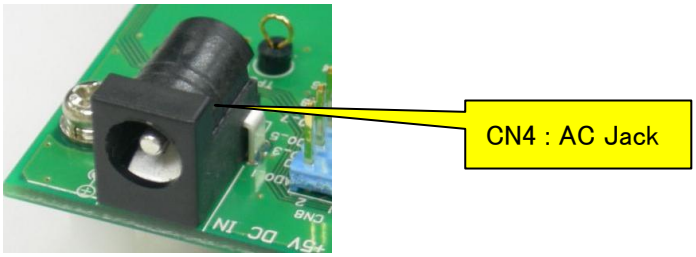

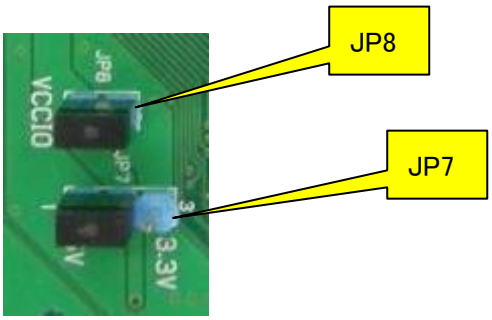

No.	Select	Note
JP8	Short	Connect ammeter to check the current
JP7	1-2	Operation voltage is 5V.
	2-3	Operation voltage is 3.3V. (Only when FL-BASE board is connected)

2.9.2 CPU

CPU is direct-mounted for "EB-850/F1L-100".

For "EB-850/F1L-100-S", only socket is mounted. Make sure the position of 1pin when you mount CPU.

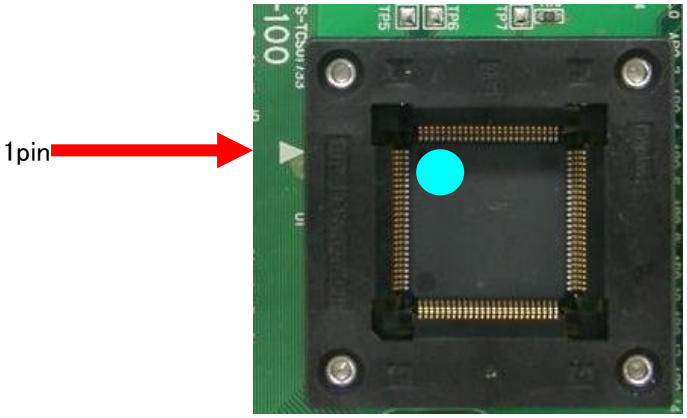

2.9.3 Clock

For the X1 and X2 of the CPU, 8**MHz** crystal oscillator (Y1) is mounted on the socket.

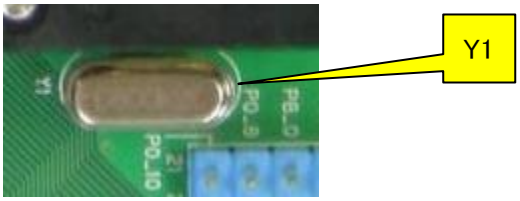

2.9.4 Reset

CPU can be reset by pressing the Reset switch (SW2).

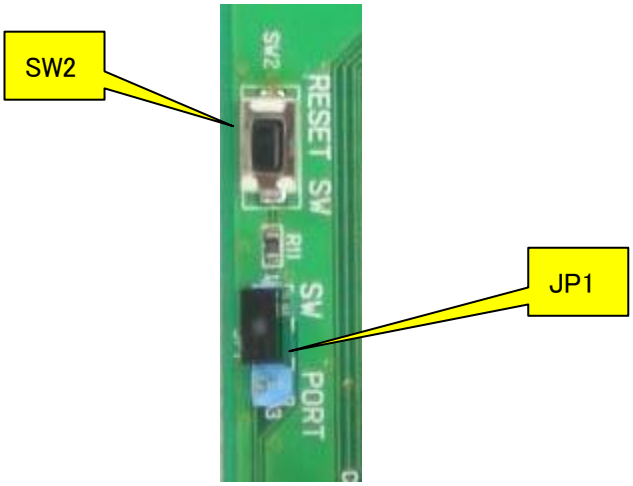

The method of outputting reset on the FL-BASE board can be set with the jumper.

No.	Select	Note
JP1	1-2	Reset Switch(SW2)
	2-3	CPU Port(P0_0)

2.9.5 Switch & LED

They are connected to port terminals of the CPU.

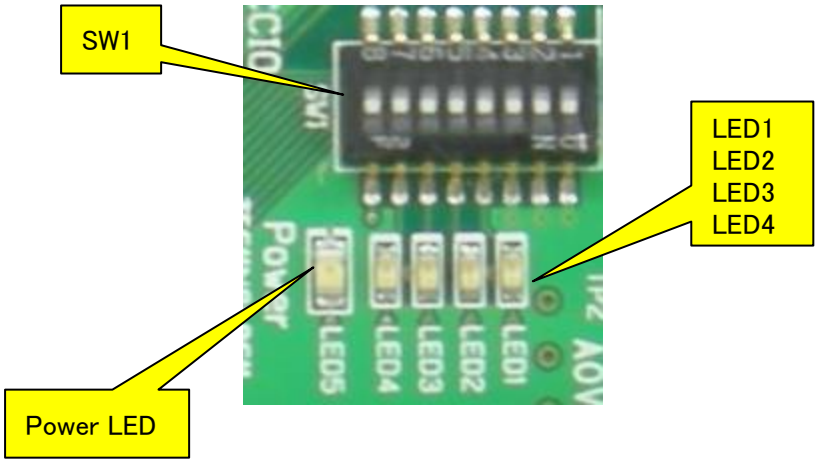

- P8_1, P8_2, and P8_3 can be used for the switch inputs.
  It connects the pull-up resistor with built-in CPU. Set the switch to OFF to read High and to ON to read Low.
- P8_4, P8_5, P8_6, and P8_7 can be connected to LED. Set the switch ON and output Low from the port to light the LED.
- SW1_8 is power indicator. Power LED is off when power is OFF.

	SW1	Connect to
P8_1/TAPA0ESO/TAUJ0O1/DPIN0/PWGA15O/INTP5/CSIH1CSS3/ADCA0I1S	1	GND
P8_2/TAUJ0I0/TAUJ0O0/DPIN2/CSIH0CSS0/INTP6/PWGA22O/ADCA0I4S	2	GND
P8_3/TAUJ0I1/TAUJ0O1/DPIN3/CSIH0CSS1/INTP7/PWGA23O/ADCA0I5S	3	GND
P8_4/TAUJ0I2/TAUJ0O2/DPIN4/CSIH0CSS2/INTP8/PWGA36O/ADCA0I6S	4	LED1
P8_5/TAUJ0I3/TAUJ0O3/CSIH0CSS3/PWGA37O/ADCA0I7S	5	LED2
P8_6/NMI/CSIH0CSS4/PWGA38O/ADCA0I8S	6	LED3
P8_7/CSIH3CSS0/PWGA39O/ADCA0I14S	7	LED4
5V Power Supply	8	Power LED

2.9.6 Debug Connector

"PG-FP5" of "E1 emulator" corresponding to Low Pin Debug Interface (4-pin) or a flash programmer is connectable with CN3.

CN5 can connect the emulator corresponding to Low Pin Debug Interface (1-pin).

(Unevaluated)

CN3

Pin Number	Signal	
	Debugger	Writer
1	DCUTCK	JP0_2
2	GND	←
3	DCUTRST	
4	FLMD0	←
5	DCUTDO	JP0_1
6	N.C.	
7	DCUTDI	JP0_0
8	VDD	←
9	DCUTMS	
10	N.C.	
11	DCUTRDY	
12	GND	←
13	RESET	←
14	GND	←

＊FLMD1 is pulldown on the board.

2.9.7 Filter socket

Filters can be implemented to A/D input terminals.

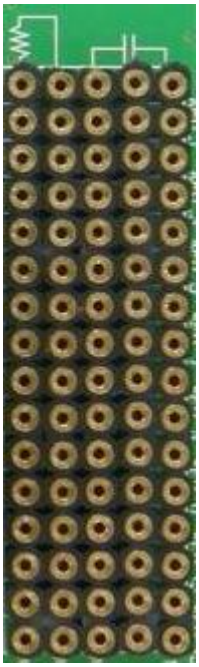

Connects (CN1, CN2) are connected through the sockets as illustrated below. Therefore, please make sure you connect resistor between the socket 4pin and 5pin when you use A/D terminal.

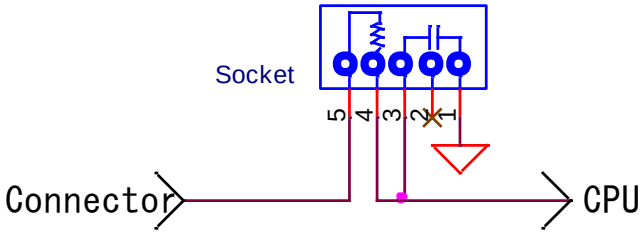

	Socket
AP0_0/ADCA0I0	AP0_0
AP0_1/ADCA0I1	AP0_1
AP0_2/ADCA0I2	AP0_2
AP0_3/ADCA0I3	AP0_3
AP0_4/ADCA0I4	AP0_4
AP0_5/ADCA0I5	AP0_5
AP0_6/ADCA0I6	AP0_6
AP0_7/ADCA0I7	AP0_7

	Socket
AP0_8/ADCA0I8	AP0_8
AP0_9/ADCA0I9	AP0_9
AP0_10/ADCA0I10	AP0_10
AP0_11/ADCA0I11	AP0_11
AP0_12/ADCA0I12	AP0_12
AP0_13/ADCA0I13	AP0_13
AP0_14/ADCA0I14	AP0_14
AP0_15/ADCA0I15	AP0_15

2.9.8 CAN

Please refer to 2.1 CAN.

3 CPU Terminal Connection List

Please download the Excel file from the web described in the document attached to the product.