TS-R-IN32M3-CEC
Users Manual
(R-IN32M3-EC Evaluation Board)
Down Load version

Issued : Nov 6,2014(Version 1.2)

Tessera Technology Corporation

TS-TUM01841

This board is for research and development.

- The contents of this document are subject to change without notice.
- The information contained herein may not be reprinted or duplicated without written consent from Tessera Technology Corporation (Tessera).
- Tessera does not guarantee or grant licenses to the intellectual property or other rights of Tessera or any third party for use of this material or the products described in this document. Tessera does not bear any responsibility if a problem related to the ownership rights of third parties arises from the use of the above-described products or information.
- The information contained in this document is intended to illustrate the operation of semiconductor products and application examples. Therefore, customers using this information in the design of their own equipment must take full responsibility for product design. Tessera shall not be liable for any damage caused to the customer or any third parties arising from the use of this material or the products described in this document.

DECLARATION OF CONFORMITY

We, Product Compliance Division
TESSERA TECHNOLOGY INC.
4F, 2710-1 Noborito, Tama-ku, Kawasaki city, Kanagawa 214-0014 JAPAN
Phone:+81-44-271-7533 Fax: +81-44-271-7534

declare under our sole responsibility that the product
Product: Board test systems
Model: TS-R-IN32M3-CEC Evaluation Board

to which this declaration relates is in conformity with the following standards of other normative documents
IEC 61326-1:2013 (Basic immunity test requirements)
IEC 61000-4-2:2008
IEC 61000-4-3:2006+A1:2007+A2:2010
IEC 61000:4-4:2004+A1:2010
IEC 61000:4-5:2005
IEC 61000:4-6:2008
IEC 61000:4-8:2009
IEC 61000:4-11:2004
CISPR 11:2009+A1:2010 (Group 1, Class A)

following the provisions of EC Council Directive
EMC Directive 2004/108/EC

Authorized Representative

Signature: Hitoshi Akimoto
Hitoshi Akimoto
TESSERA TECHNOLOGY INC.
The president

Date of Issue: Nov 18. 2013

TS-TER01862

Revision History

Version	Date	Description
Ver 1.0	14/1/6	Initial version
Ver 1.1	14/3/4	11.2 add attention
Ver 1.2	14/11/6	Company logo change

TABLE OF CONTENTS

1. Application

This user's manual provides explanations for use of the R-IN32M3-CEC evaluation board.

2. Summary

The R-IN32M3-EC board was developed for evaluating the R-IN32M3-EC device and offers the following interfaces:

Mounted interfaces have been limited for smaller sized boards.

- 10BASE-T / 100BASE-TX (Ethernet/EtherCAT)
- USB Virtual COM (mini-B)
- I2C *1
- CSI *1
- NMIZ *1
- GPIO *1
- Extended Connector (Ext. Memory/Ext. MCU I/F) *1
- ICE(JTAG) *Parts for expansion are not mounted.
- and others

*1 Part not mounted.

3. Specification

Item	Specification		
Main ASSP *1	Renesas Electronics System LSI R-IN32M3-EC ARM Cortex-M3 32-bit RISC CPU with HW-RTOS（Hardware Real-Time OS） 1.3M-byte large-capacity RAM, operating frequency 100MHz On-chip 10Base-T/100Base-TX Ethernet PHY		
Ext. Memory	Flash memory (Serial)	32M, S25FL032P0XNFI010 equivalent	
	EEPROM (when using EtherCAT)	16K , AT24C16C-MEHM-T equivalent	
Interface	CSI *3	1Ch	3 ×1 Pin 2.00 × 2.00mm Header
	I2C *3	1Ch	2 × 1 Pin 2.00 × 2.00mm Header
	Extended Connector (Ext. Memory / Ext. Host/etc.) *3	1Ch	30 × 2 Pin 1.27 × 1.27mm Header
	UART	1Ch(UART to USB)	USB mini-B Connector (USB-Ver2) *2
	NMIZ *3	1Ch	1-Pin Header
	Ethernet / EtherCAT	2Ch	RJ-45
	GPIO *3	1Ch	4 × 2 Pin 2.00 × 2.00mm Header
	ICE(JTAG)	1Ch	20-pin half-pitch connector (Trace supported)
	Power Supply *3	1Ch	3 ×2 Pin 1.27 × 1.27mm Header
LED	GPIO	8 green LEDs	
	Power Supply	1 red LED	
	Built in RJ45 connector	2 green and yellow LEDs per Ch	
	Ethernet / EtherCAT Monitor	2 green LEDs per Ch	
	EtherCAT Monitor	5 red and green LEDs	
DIP-SW	Operation mode selection	8 bits (SW1)	
Power Supply	AC Adapter	+5.0V +/- 5%, 2A or more (center plus)	
Operation Temp	0 to +70 C		

*1 -- ASSP means "Application Specific Standard Product," a standard System LSI. Please refer to the Renesas datasheet and user's manual for details concerning R-IN32M3-EC.

*2 -- The USB cable must be inserted and detached while the board is powered.

*3 -- Part not mounted.

4. Board Outline

The following pages show photos of the board outline.

4.1. Board Component Side

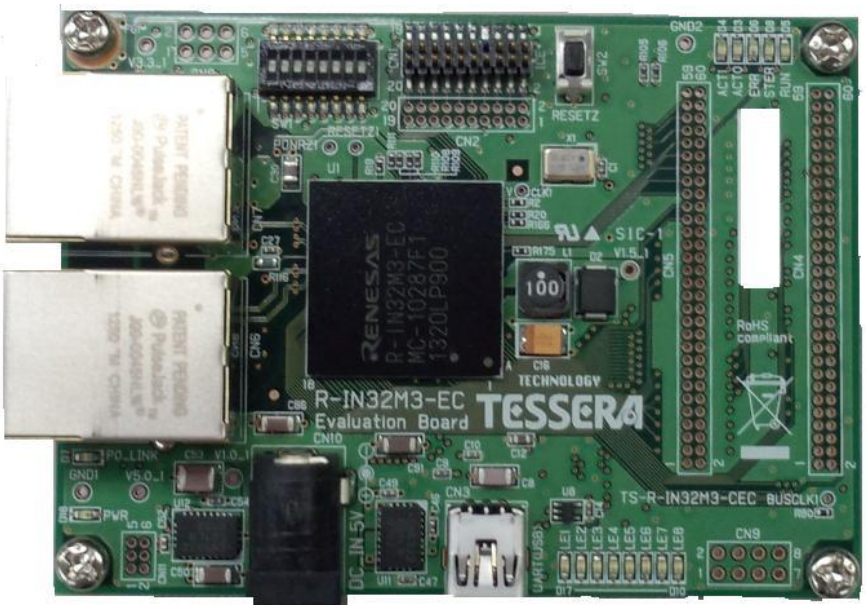

4.2. Board Soldering Side

5. Component Names

Each component location is defined by the following grid coordinates, which are often used in the component description sections.

5.1. Component Side

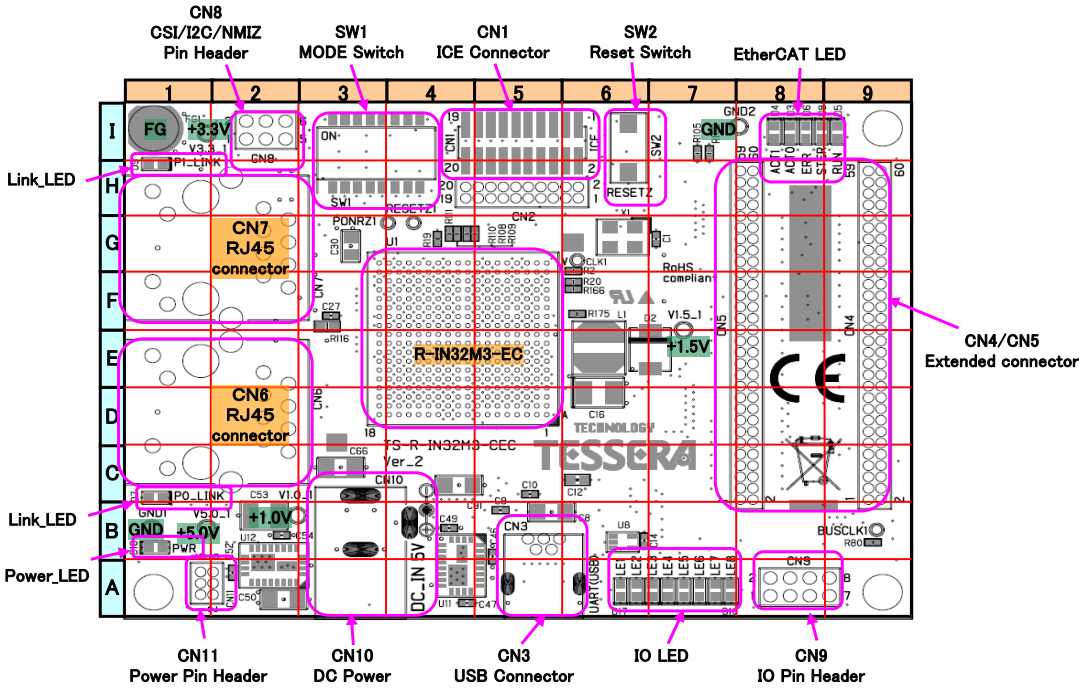

5.2. Soldering Side

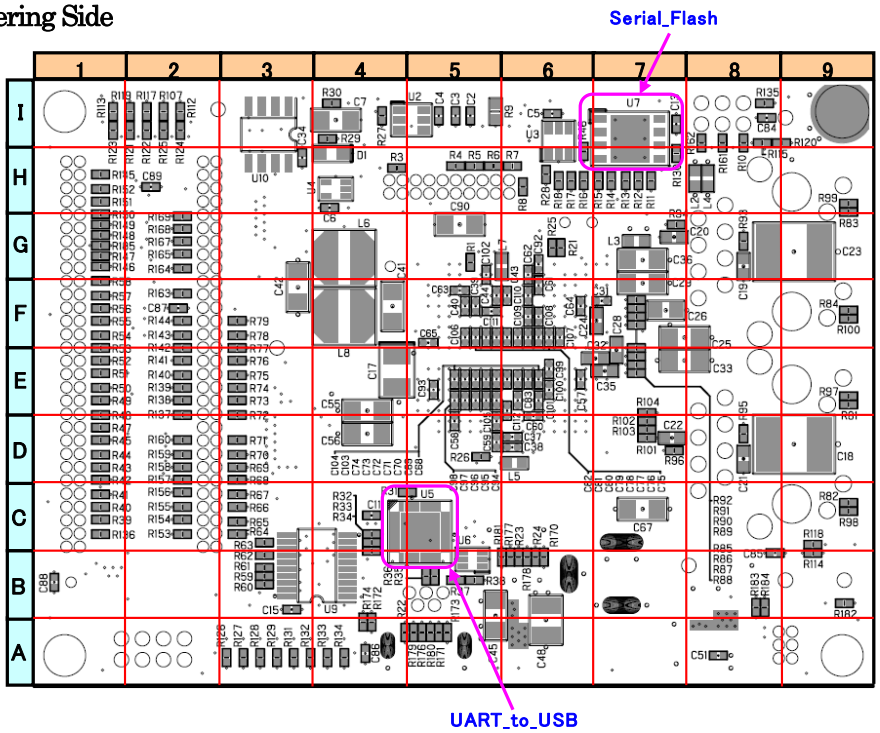

6. Board Block Diagram

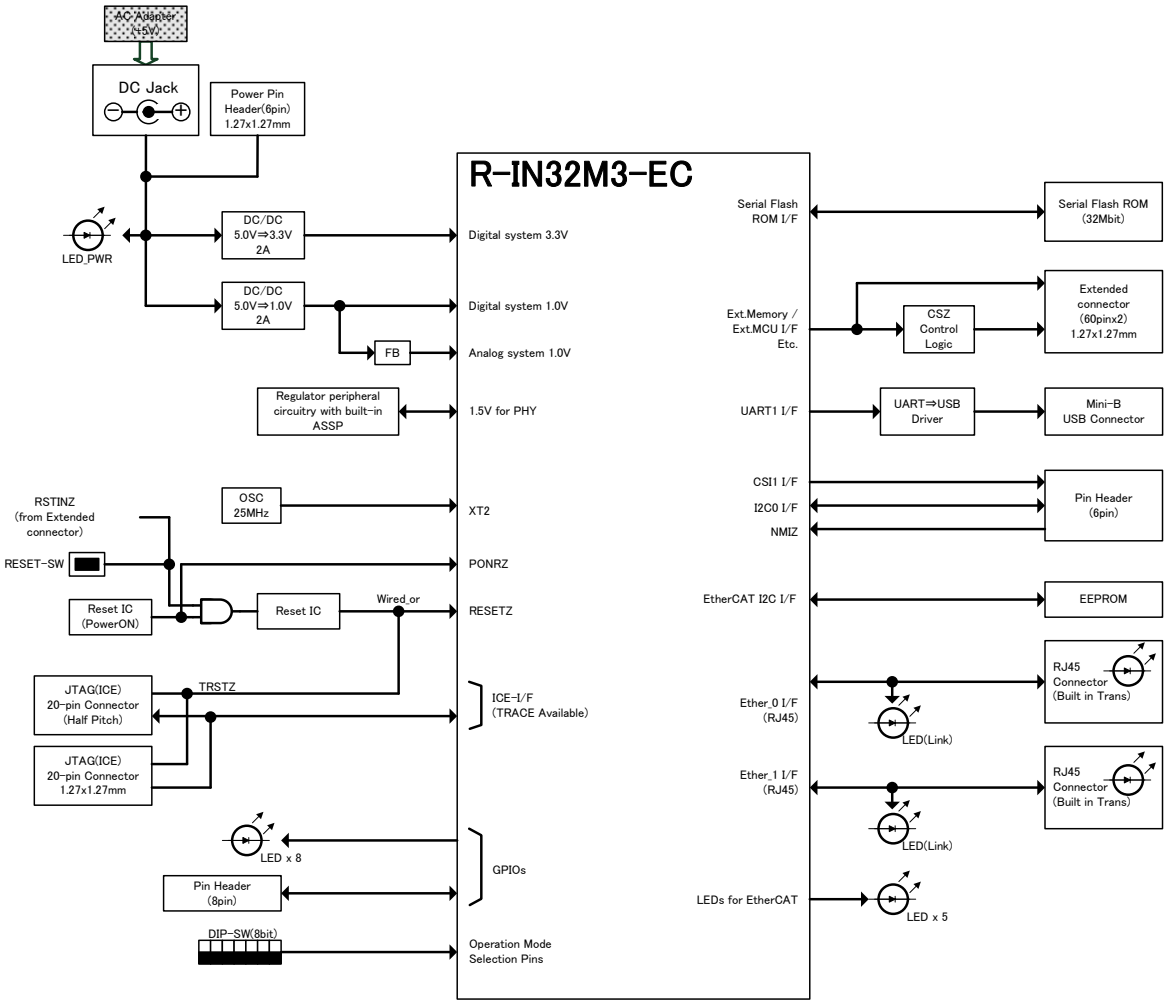

7. Block Descriptions

7.1. R-IN32M3-EC

Refer to the corresponding Renesas Electronics Corp. datasheet and user's manual for more details.

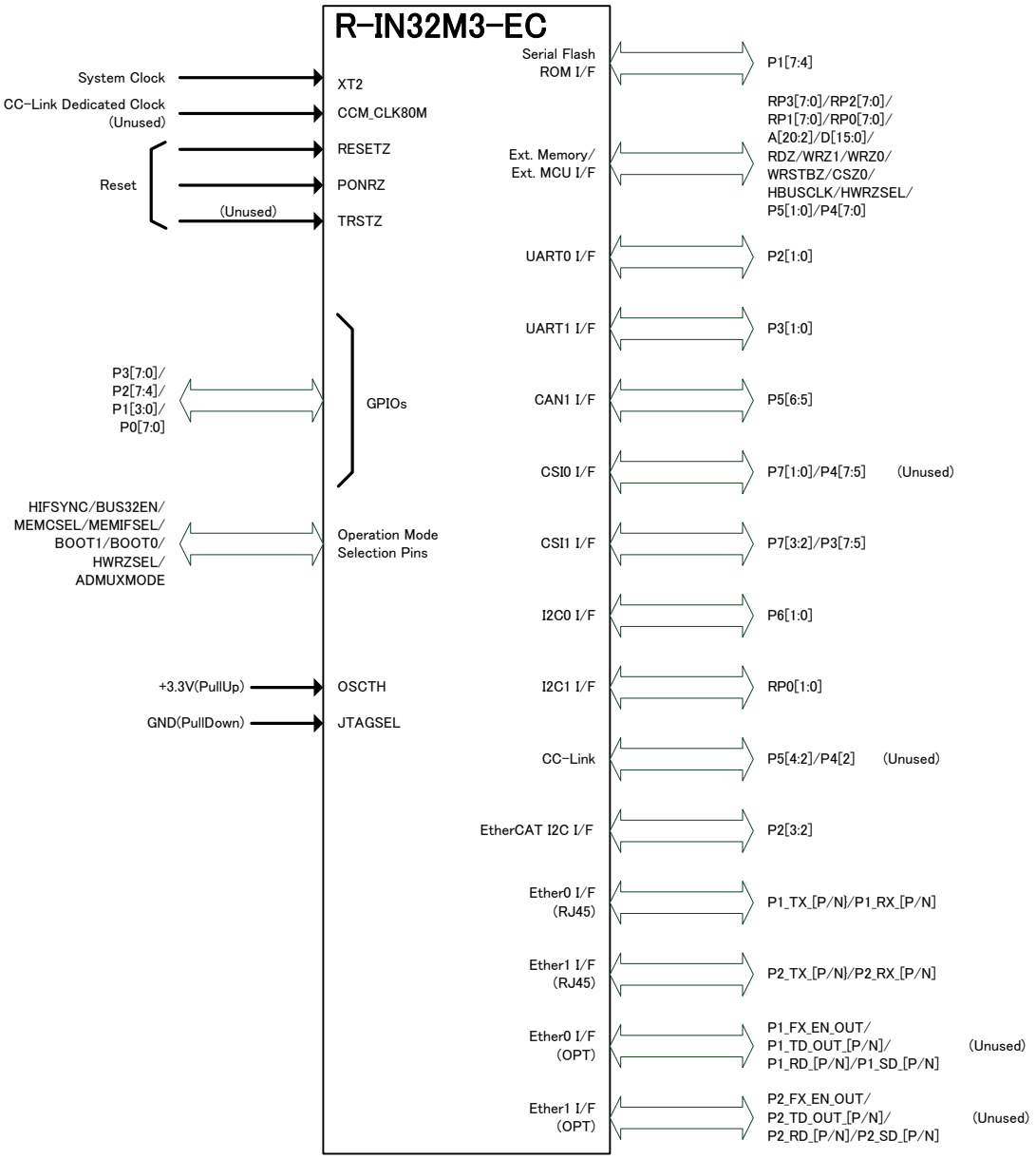

7.2. Extended Connector（Ext. Memory/Ext. MCU I/F）

Two 60-pin headers (CN4/CN5) are mounted for the external memory and external host. The chip select signal is connected through 74HC244, output via CSZ0~3 when the external memory is used, and becomes an input for HCSZ/HPGCSZ when the external host is used.
Bit 4 of DIP switch SW1 defines the signal direction of 74HC244. The user must set the direction depending on the HCSZ/HPGCSZ selection.)

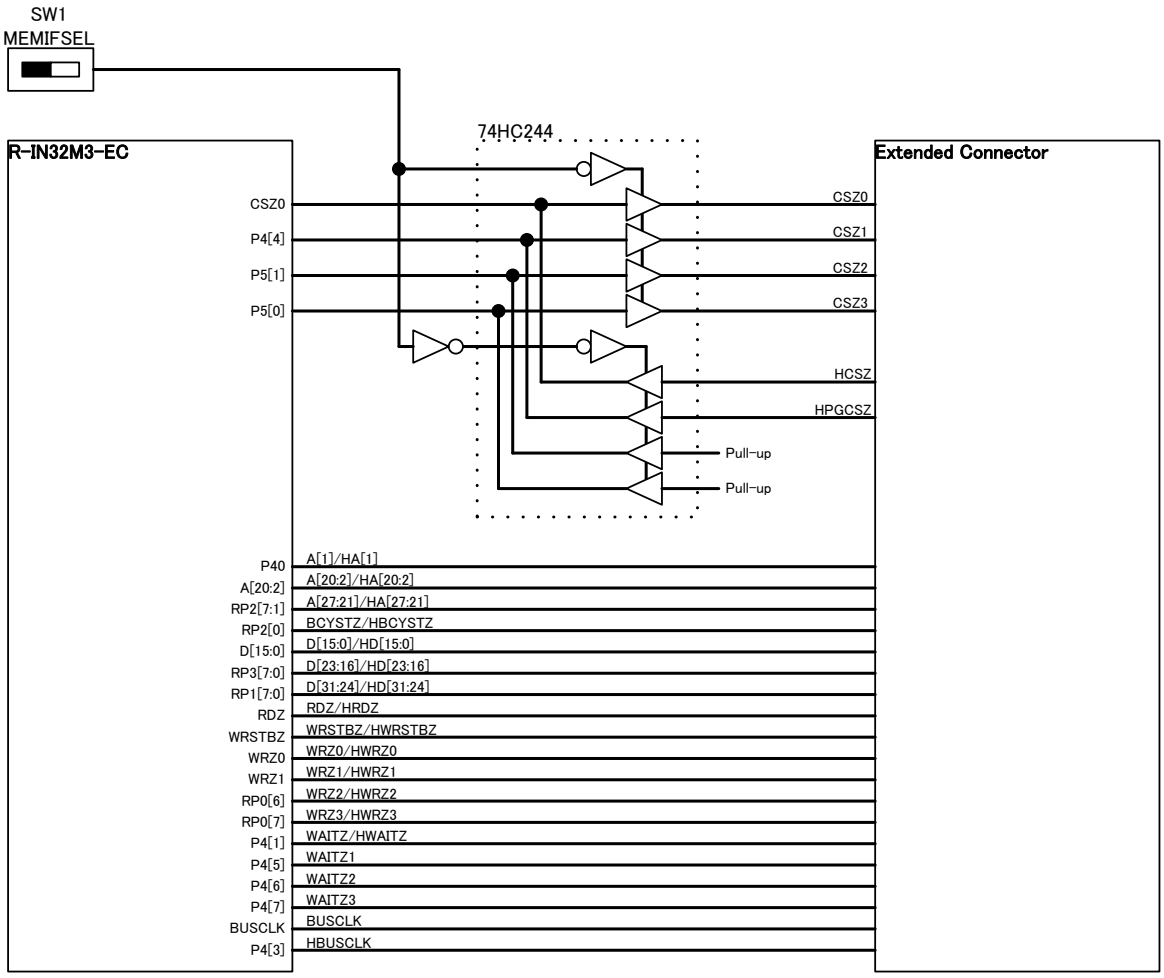

7.3. Serial_Flash Memory

A serial flash memory (S25FL064P0XNFI010 equivalent) is used to boot the internal CPU.

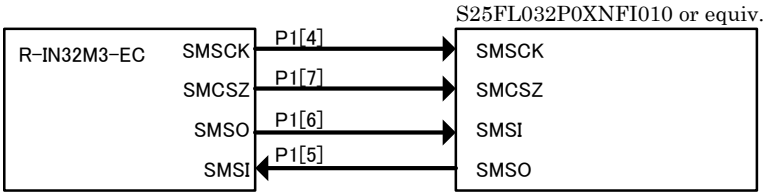

7.4. UART

The board offers a UART-to-USB chip for the UART1 function (FT232RQ) and a USB connector, supporting PC communication in asynchronous mode.
A USB mini-B connector (CN3) is mounted for UART interface.

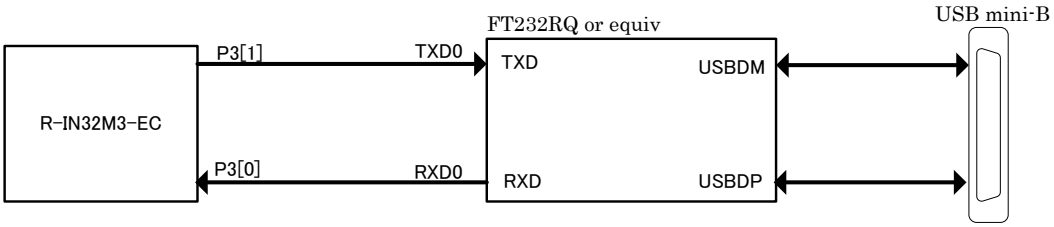

7.5. Ethernet / EtherCAT

R-IN32M3-EC is equipped with on-chip 10/100Mbps Ethernet PHY. The board offers 2 channels of RJ45 connectors (CN6/CN7), which embed transformers.

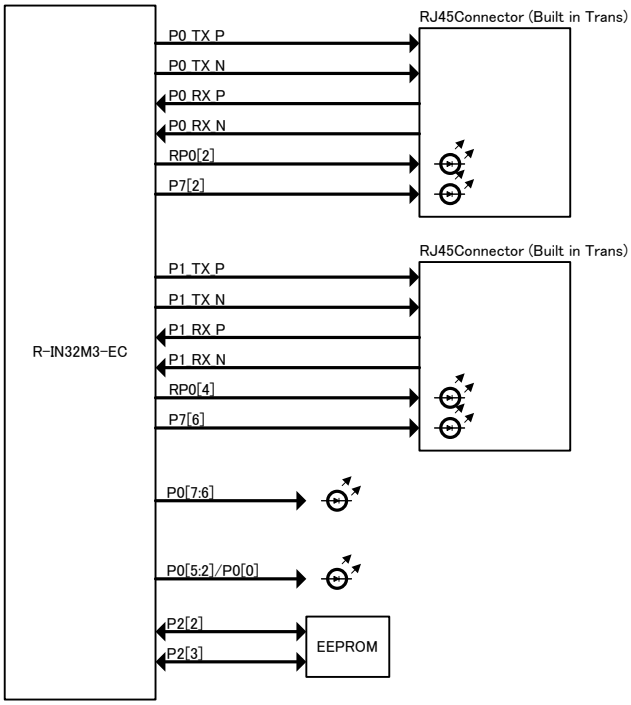

The following LEDs are mounted for monitoring Ethernet/EtherCAT.

※ Ethernet/EtherCAT monitoring LEDs

Location on board : C-1

P0LINKLED	Green LED

Location on board : D-1

P0SPEED100LED	Green LED (in RJ-45 connector)
P0ACTLEDZ	Yellow LED (in RJ-45 connector)

Location on board : H-1

P1LINKLED	Green LED

Location on board : G-1

P1SPEED100LED	Green LED (in RJ-45 connector)
P1ACTLEDZ	Yellow LED (in RJ-45 connector)

※ EtherCAT monitoring LEDs

Location on board : I-8

CATLINKACT0	Green LED
CATLINKACT1	Green LED
CATLEDRUN	Green LED
CATLEDSTER	Green LED
CATLEDERR	Red LED

7.6. CSI

R-IN32M3-EC is connected to the header (CN8), enabling CSI sync communications.
The I/O interface voltage must be 3.3V.
*This connector is not mounted.

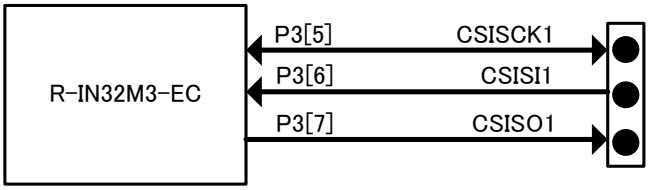

7.7. I2C

R-IN32M3-EC is connected to the header (CN8), enabling I2C sync communications.
The I/O interface voltage must be 3.3V.

*This connector is not mounted.

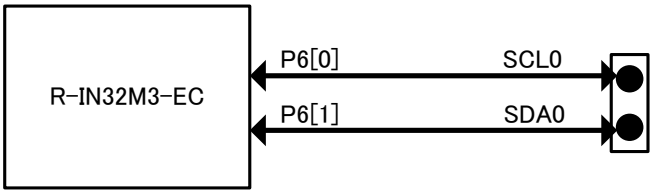

7.8. NMIZ

R-IN32M3-EC is connected to the header (CN8), enabling interrupt input (NMIZ).
The I/O interface voltage must be 3.3V. Pin NMIZ pin of the R-IN32M3-EC chip and pin header CN8 are directly connected for the NMIZ interrupt. Make sure the interface voltage of this pin is 3.3V.

* This connector is not mounted.

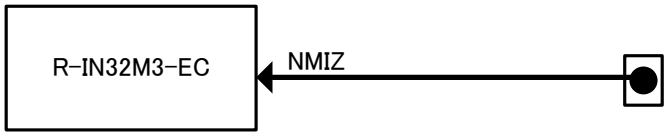

7.9. GPIO

The LEDs (green, 8 bits) and pin header (CN9, 8 bits) are connected to port pins.
* Each LED turns on when the respective bit of PR3 is set to high.
* Connector CN9 is not mounted.

Location on board : A-7

LED
(LED1～LED8)

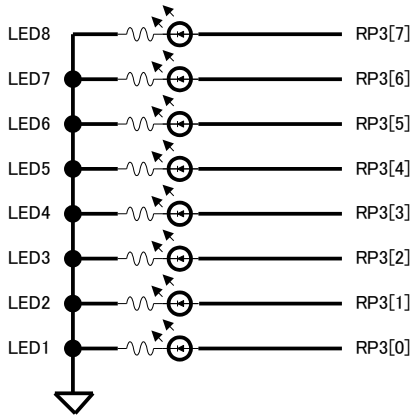

Location on board : A-8

Pin Header
(CN9)

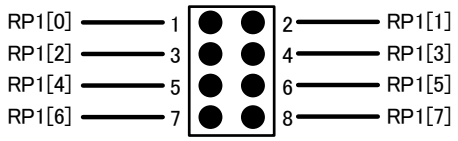

7.10. Reset

When the board is powered, push the reset button (SW2) or apply a reset signal via 20-pin half-pitch connector (CN1) to reset all board resources. During power-on reset, the on-chip RAM is also reset.

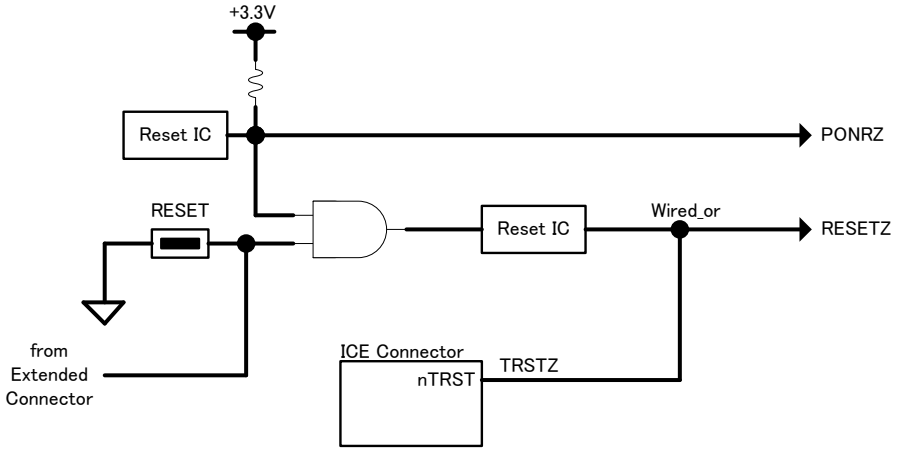

* Reset release time:

The reset circuit shown above generates about 20ms and 40ms L-states for the PONRZ and RESETZ signals respectively during the power-on sequence and generates 20ms L-state for the RESETZ signal when the RESET switch is pushed.

7.11. 20-pin Half Pitch Connector (trace supported)

This connector connects ICE to the CPU in the R-IN32M3-EC chip.
The connector is a 10 x 2 pin header (CN1) with 1.27 mm pitch.
* To avoid incorrect insertion, pin 7 is pulled out.
* Signal TRSTZ is wired-OR connected to signal RESETZ pin.
* Connector CN2 is not mounted.

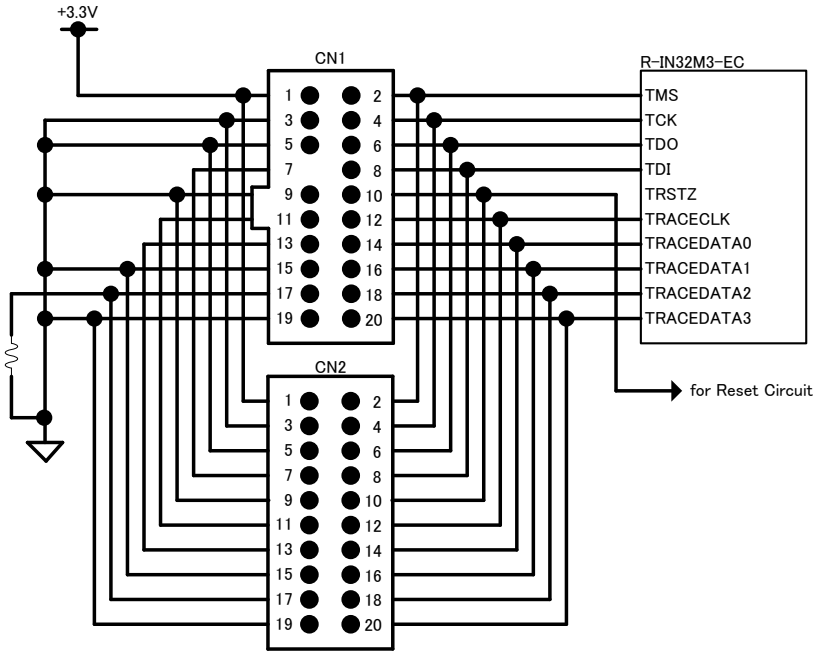

7.12. Clock (Oscillator)

This evaluation board provides the following clock: R-IN32M3-EC system clock (25 MHz).
*Oscillation stabilization period for each oscillator: 10ms.

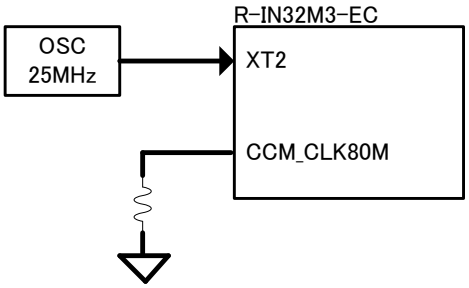

7.13. Operation Mode Selection

An 8-bit DIP switch (DIP-SW1) is provided for operation mode selections.

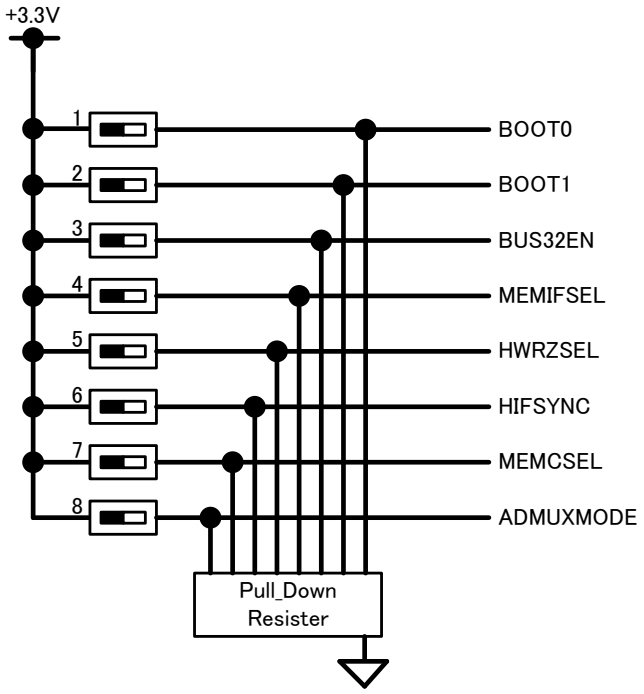

7.14. Power Supply

The DC jack or power supply extension cable (CN11) supplies 5V and the DC/DC convertors generate power for each device.

The DC/DC converter array provides the following current capacities: 3.3V 2A (max), 1.0V 2A (max).

When 5.0V is supplied, LED_PWR (red) turns on.

* Connector CN11 is not mounted.

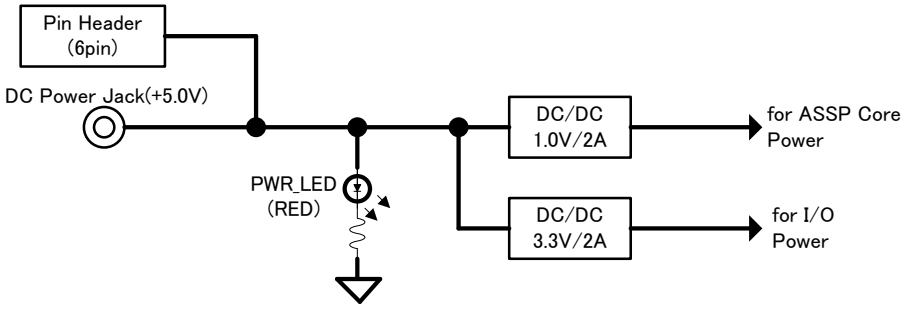

8. DIP-SW Configuration

8.1. SW1 Mode Selection

Location : I-3

Board Silk : SW1

Part # : COPAL OHS-08TB (or equivalent part)

SW1 is an 8-bit DIP switch connected to the I/O ports of the R-IN32M3-EC chip. SW 1 defines the operation mode of the R-IN32M3-EC chip. The OFF and ON settings of the switch represent L- and H-levels respectively.

* Default factory setting: all OFF positions

SW1		Level		Pin Name	Boot Mode Selection
2	1	2	1		
ON	ON	H	H	BOOT1 BOOT0	Instruction Ram Boot (Debug only)
ON	OFF	H	L		Ext. MCU Boot
OFF	ON	L	H		Ext. Serial Flash ROM Boot
OFF	OFF	L	L		Ext. Memory Boot

SW1 3	Level	Pin Name	Ext. Memory I/F Bus Width Selection
OFF	L	BUS32EN	16-bit Bus
ON	H		32-bit Bus
SW1 4	**Level**	**Pin Name**	**Ext. Memory I/F Type Selection**
OFF	L	MEMIFSEL	Slave Memory I/F
ON	H		Ext. MCU I/F
SW1 5	**Level**	**Pin Name**	**Ext. MCU I/F HWRZ/HBENZ Selection**
OFF	L	HWRZSEL	HBENZ is selected
ON	H		HWRZ is selected
SW1 6	**Level**	**Pin Name**	**Ext. MCU I/F Operation Mode Selection**
OFF	L	HIFSYNC	Asynchronous SRAM Interface
ON	H		Synchronous SRAM Interface
SW1 6	**Level**	**Pin Name**	**Ext. Memory Controller Setting**
OFF	L	MEMCSEL	Asynchronous SRAM MEMC
ON	H		Synchronous burst access MEMC
SW1 8	**Level**	**Pin Name**	**Ext. Memory I/F Address MUX Selection**
OFF	L	ADMUXMODE	Connect is parallel
ON	H		Address bus is MUXed on deta bus

9. Connector Pin Definition

9.1. 20-pin Half-Pitch Connector (for Trace)

Location：I-5、H-5

Board Silk：CN1、CN2
Type：10×2pin 1.27×1.27mm Pin Header
Part #：E-Tec　SS2-19A-H70/0-55/11（or equivalent part）
* To avoid incorrect insertion, pin 7 is pulled out.
*
Uses E-Tec BL2-020-S430-55/1, 1.27 x 1.27mm pin header as an extension (CN2). (Connector CN2 is not mounted.)

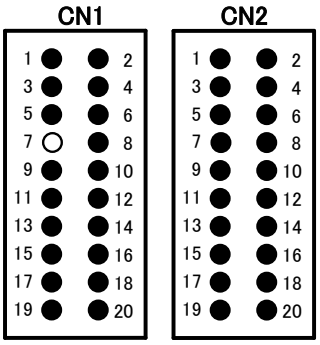

Pin #	I/O Dir.	Sig. Name	R-IN32M3-EC Pin Name	Pin #	I/O Dir.	Sig. Name	R-IN32M3-EC Pin Name
1	–	(Vtref)	–	11	–	TgrPwr	–
2	Output	TMS	TMS	12	Input	TRACECLK	TRACECLK
3	–	GND	–	13	–	TgrPwr	–
4	Output	TCK	TCK	14	Input	TRACEDATA0	TRACEDATA0
5	–	GND	–	15	–	GND	–
6	Output	TDO	TDO	16	Input	TRACEDATA1	TRACEDATA1
7	–	–	–	17	–	GND	–
8	Input	TDI	TDI	18	Input	TRACEDATA2	TRACEDATA2
9	–	GND	–	19	–	GND	–
10	Output	nRESET	TRSTZ	20	Input	TRACEDATA3	TRACEDATA3

9.2. Extended Connector（Ext. Memory/Ext. MCU I/F Connector）

Location：H-8、H-9

Board Silk：CN4、CN5

Type：30×2 pin 1.27x1.27mm Pin Header 2 units

Part #：E-Tec　BL2-060-S430-55/1（or equivalent part）

*This connector is not mounted.

CN4

External Memory I/F

Pin #	I/O Dir.	Signal Name	Pin #	I/O Dir.	Signal Name
1	–	GND	2	–	GND
3	Output	P40(A1)	4	Output	BUSCLK
5	Output	A2	6	Output	CSZ0
7	Output	A3	8	Output	P44(CSZ1)
9	Output	A4	10	Output	P51(CSZ2)
11	Output	A5	12	–	GND
13	Output	A6	14	–	–
15	Output	A7	16	Output	P50(CSZ3)
17	Output	A8	18	–	–
19	Output	A9	20	–	GND
21	Output	A10	22	Output	WRSTBZ
23	Output	A11	24	Output	WRZ1/BENZ1
25	Output	A12	26	Output	WRZ0/BENZ0
27	Output	A13	28	Output	RP07(WRZ3)
29	Output	A14	30	Output	RP06(WRZ2)
31	Output	A15	32	–	GND
33	Output	A16	34	Input	RP05(INTPZ21)
35	Output	A17	36	Input	RP03(INTPZ19)
37	Output	A18	38	Output	RDZ
39	Output	A19	40	Input	P41(WAITZ)
41	Output	A20	42	Input	P47(WAITZ3)
43	Output	RP21(A21)	44	–	GND
45	Output	RP22(A22)	46	–	–
47	Output	RP23(A23)	48	Output	P06(P0LINKLEDZ)
49	Output	RP24(A24)	50	–	GND
51	Output	RP25(A25)	52	Output	P56(CATRESTOUT)
53	Output	RP26(A26)	54	Input	P53(CRXD0)
55	Output	RP27(A27)	56	Output	P54(CTXD0)
57	Output	RP20(BCYSTZ)	58	Input	P45(WAITZ1)
59	–	GND	60	Output	P42(HERROUTZ)

CN4

External MCU I/F

Pin #	I/O Dir.	Signal Name	Pin #	I/O Dir.	Signal Name
1	–	GND	2	–	GND
3	Input	P40(HA1)	4	–	–
5	Input	HA2	6	–	–
7	Input	HA3	8	–	–
9	Input	HA4	10	–	–
11	Input	HA5	12	–	GND
13	Input	HA6	14	Input	P44(HPGCSZ)
15	Input	HA7	16	–	–
17	Input	HA8	18	Input	HCSZ
19	Input	HA9	20	–	GND
21	Input	HA10	22	Input	HWRSTBZ
23	Input	HA11	24	Input	HWRZ1/HBENZ1
25	Input	HA12	26	Input	HWRZ0/HBENZ0
27	Input	HA13	28	Input	RP07(HWRZ3)
29	Input	HA14	30	Input	RP06(HWRZ2)
31	Input	HA15	32	–	GND
33	Input	HA16	34	Input	RP05(INTPZ21)
35	Input	HA17	36	Input	RP03(INTPZ19)
37	Input	HA18	38	Input	HRDZ
39	Input	HA19	40	–	–
41	Input	HA20	42	–	–
43	Input	RP21(HA21)	44	–	GND
45	Input	RP22(HA22)	46	Input	P43(HBUSCLK)
47	Input	RP23(HA23)	48	Output	P06(P0LINKLEDZ)
49	Input	RP24(HA24)	50	–	GND
51	Input	RP25(HA25)	52	Output	P56(CATRESTOUT)
53	Input	RP26(HA26)	54	Input	P53(CRXD0)
55	Input	RP27(HA27)	56	Output	P54(CTXD0)
57	Input	RP20(HBCYSTZ)	58	–	–
59	–	GND	60	–	–

CN5

External Memory I/F

Pin #	I/O Dir.	Signal Name	Pin #	I/O Dir.	Signal Name
1	–	GND	2	–	GND
3	I/O	D0	4	I/O	RP30(D16)
5	I/O	D1	6	I/O	RP31(D17)
7	I/O	D2	8	I/O	RP32(D18)
9	I/O	D3	10	I/O	RP33(D19)
11	I/O	D4	12	I/O	RP34(D20)
13	I/O	D5	14	I/O	RP35(D21)
15	I/O	D6	16	I/O	RP36(D22)
17	I/O	D7	18	I/O	RP37(D23)
19	–	GND	20	–	GND
21	I/O	D8	22	I/O	RP10(D24)
23	I/O	D9	24	I/O	RP11(D25)
25	I/O	D10	26	I/O	RP12(D26)
27	I/O	D11	28	I/O	RP13(D27)
29	I/O	D12	30	I/O	RP14(D28)
31	I/O	D13	32	I/O	RP15(D29)
33	I/O	D14	34	I/O	RP16(D30)
35	I/O	D15	36	I/O	RP17(D31)
37	–	GND	38	–	GND
39	I/O	RP01(SDA1)	40	Output	P01(CATIRQ)
41	I/O	RP00(SCL1)	42	Output	P00(CATLEDRUN)
43	Output	P07(P1LINKLEDZ)	44	Input	P20(RXD0)
45	Output	P05(CATLINKACT1)	46	Output	P21(TXD0)
47	Output	P04(CATLINKACT0)	48	Output	P25(WDTOUTZ)
49	Output	P03(CATLEDERR)	50	I/O	P26(TIN1/TOUT1)
51	Output	P02(CATLEDSTER)	52	I/O	P27(TIN0/TOUT0)
53	Input	P13(INTPZ7)	54	Input	P12(INTPZ6)
55	I/O	P10(CATLATCH1/CATSYNC1)	56	I/O	P11(CATLATCH0/CATSYNC0)
57	Input	P46(WAITZ2)	58	Input	NMIZ
59	–	GND	60	Input	RSTINZ

CN5

External MCU I/F

Pin #	I/O Dir.	Signal Name	Pin #	I/O Dir.	Signal Name
1	–	GND	2	–	GND
3	I/O	HD0	4	I/O	RP30(HD16)
5	I/O	HD1	6	I/O	RP31(HD17)
7	I/O	HD2	8	I/O	RP32(HD18)
9	I/O	HD3	10	I/O	RP33(HD19)
11	I/O	HD4	12	I/O	RP34(HD20)
13	I/O	HD5	14	I/O	RP35(HD21)
15	I/O	HD6	16	I/O	RP36(HD22)
17	I/O	HD7	18	I/O	RP37(HD23)
19	–	GND	20	–	GND
21	I/O	HD8	22	I/O	RP10(HD24)
23	I/O	HD9	24	I/O	RP11(HD25)
25	I/O	HD10	26	I/O	RP12(HD26)
27	I/O	HD11	28	I/O	RP13(HD27)
29	I/O	HD12	30	I/O	RP14(HD28)
31	I/O	HD13	32	I/O	RP15(HD29)
33	I/O	HD14	34	I/O	RP16(HD30)
35	I/O	HD15	36	I/O	RP17(HD31)
37	–	GND	38	–	GND
39	I/O	RP01(SDA1)	40	Output	P01(CATIRQ)
41	I/O	RP00(SCL1)	42	Output	P00(CATLEDRUN)
43	Output	P07(P1LINKLEDZ)	44	Input	P20(RXD0)
45	Output	P05(CATLINKACT1)	46	Output	P21(TXD0)
47	Output	P04(CATLINKACT0)	48	Output	P25(WDTOUTZ)
49	Output	P03(CATLEDERR)	50	I/O	P26(TIN1/TOUT1)
51	Output	P02(CATLEDSTER)	52	I/O	P27(TIN0/TOUT0)
53	Input	P13(INTPZ7)	54	Input	P12(INTPZ6)
55	I/O	P10(CATLATCH1/CATSYNC1)	56	I/O	P11(CATLATCH0/CATSYNC0)
57	–	–	58	Input	NMIZ
59	–	GND	60	Input	RSTINZ

9.3. Ethernet / EtherCAT Connector

Location : G-1/D-1

Board Silk : CN6 / CN7
Type : RJ-45（built-in transformer and LED）2 units
Part # : Pulse　J00-0045NL（or equivalent part）
*CN6 (ch0)/CN7 (ch1)

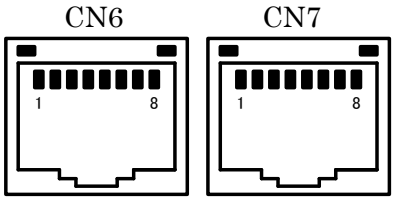

CN6

Pin #	I/O Dir.	Signal Name	R-IN32M3-EC Pin Name
1	Output	TX+	P0_TX_P
2	Output	TX-	P0_TX_N
3	Input	RX+	P0_RX_P
4	-	-	-
5	-	-	-
6	Input	RX-	P0_RX_N
7	-	-	-
8	-	-	-

CN7

Pin #	I/O Dir.	Signal Name	R-IN32M3-EC Pin Name
1	Output	TX+	P1_TX_P
2	Output	TX-	P1_TX_N
3	Input	RX+	P1_RX_P
4	-	-	-
5	-	-	-
6	Input	RX-	P1_RX_N
7	-	-	-
8	-	-	-

9.4. I2C Connector

Location : I-2

Board Silk : CN8

Type : 3×2 pin 2.00 x2.00mm Pin Header

Part # : MAC8　MXW-20-1-3PW（or equivalent part）

* The connector is shared by peripheral functions I2C, CSI and NMZI. Function I2C uses pins 1 and 3.

*This connector is not mounted.

CN8

Pin #	I/O Dir.	Signal Name	R-IN32M3-EC Pin Name
1	I/O	SCL0	P60
2	I/O	CSISCK1	P35
3	I/O	SDA0	P61
4	Input	CSISI1	P36
5	I/O	NMIZ	NMIZ
6	Output	CSISO1	P37

9.5. CSI Connector

Location : I-2

Board Silk : CN8

Type : 3×2 pin 2.00 x2.00mm Pin Header

Part # : MAC8 MXW-20-1-3PW (or equivalent part)

*The connector is shared by peripheral functions I2C, CSI and NMZI. Function CSI uses pins 2, 4, and 6.

*This connector is not mounted.

CN8

Pin #	I/O Dir.	Signal Name	R-IN32M3-EC Pin Name
1	I/O	SCL0	P60
2	I/O	CSISCK1	P35
3	I/O	SDA0	P61
4	Input	CSISI1	P36
5	I/O	NMIZ	NMIZ
6	Output	CSISO1	P37

9.6. NMIZ Connector

Location : I-2

Board Silk : CN8

Type : 3×2 pin 2.00 x2.00mm Pin Header

Part # : MAC8 MXW-20-1-3PW (or equivalent part)

*The connector is shared by peripheral functions I2C, CSI and NMZI. Function NMIZ uses pin 5.

*This connector is not mounted.

CN8

Pin #	I/O Dir.	Signal Name	R-IN32M3-EC Pin Name
1	I/O	SCL0	P60
2	I/O	CSISCK1	P35
3	I/O	SDA0	P61
4	Input	CSISI1	P36
5	I/O	NMIZ	NMIZ
6	Output	CSISO1	P37

9.7. UART Connector

Location：A-5

Board Silk：CN3

Type：USB mini-B

Part #：molex　54819-0519（or equivalent part）

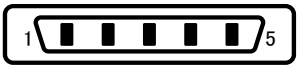

CN3

Pin #	I/O Dir.	Signal Name
1	–	(VBUS)
2	–	(ID)
3	I/O	D+
4	I/O	D–
5	–	GND

9.8. GPIO Port Connector

Location：A-8

Board Silk：CN9

Type：4×2 pin 2.00 x2.00mm Pin Header

Part #：MAC8　MXW-20-1-4PW（or equivalent part）

*This connector is not mounted.

CN9

Pin #	I/O Dir.	Signal Name
1	GPIO_0	RP10
2	GPIO_1	RP11
3	GPIO_2	RP12
4	GPIO_3	RP13
5	GPIO_4	RP14
6	GPIO_5	RP15
7	GPIO_6	RP16
8	GPIO_7	RP17

9.9. DC Power Jack

Location：A-3

Board Silk：CN10
Type：DC power jack (center plus, ϕ 6.5mm, 3A, 16V DC)
Part #：HOSIDEN　HEC0470-01-630（or equivalent part）

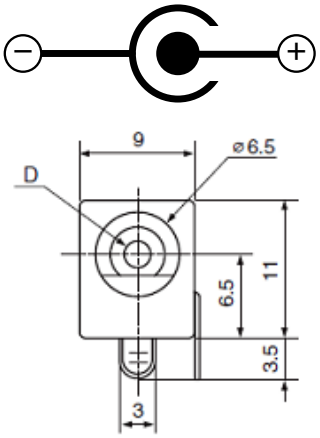

D = ϕ 2.0

9.10. DC Power Supply Extension Connector

Location：A-1

Board Silk：CN11

Type：3×2 pin 1.27 x1.27mm Pin Header

Part #：E-Tec　BL2-006-S430-55/1（or equivalent part）

*This connector is not mounted.

CN11

Pin #	Signal Name
1	GND
2	+5.0V
3	GND
4	+5.0V
5	GND
6	+5.0V

10. Table of Unused Pins and Pads

10.1. PAD Connection Pins

The following pins of the R-IN32M3-EC chip and others are connected to probing pads.

Device	Pin Name	Location	Note
R-IN32M3-EC	CLK1	0.5mm	-
Reset	PONRZ1	0.5mm	Connect to +3.3V via Pull-up resister
	RESETZ	0.5mm	Connect to +3.3V via Pull-up resister
Power	V5.0_1	0.8mm	-
	V3.3_1	0.8mm	-
	V1.0_1	0.8mm	-
	V1.5_1	0.8mm	-
	GND1	0.8mm	-
	GND2	0.8mm	-
	FG1	3.5mm	-

10.2. Unused Pins

The following R-IN32M3-EC pins are not used.

Pin Name	Unused Pin State
ATP	Open
TEST1	Connect to GND via Pull-down resister
TEST2	Connect to GND via Pull-down resister
TEST3	Connect to GND via Pull-down resister
TMC1	Connect to GND via Pull-down resister
TMC2	Connect to GND via Pull-down resister
TMODE0	Connect to GND
TMODE1	Connect to GND
TMODE2	Connect to GND
XT1	Connect to GND via Pull-down resister
TESTDOUT5	Open
CCM_CLK80M	Connect to GND via Pull-down resister
TRSTZ	Open
RSTOUTZ	Open
OSCTH	Connect to +3.3V via Pull-up resister
JTAGSEL	Connect to GND via Pull-down resister
P0_TD_OUT_P	Open
P0_TD_OUT_N	Open
P0_RD_P	Connect to GND via Pull-down resister
P0_RD_N	Connect to GND via Pull-down resister
P0_FX_EN_OUT	Open
P0_SD_P	Connect to GND via Pull-down resister
P0_SD_N	Connect to GND via Pull-down resister
P1_TD_OUT_P	Open
P1_TD_OUT_N	Open
P1_RD_P	Connect to GND via Pull-down resister
P1_RD_N	Connect to GND via Pull-down resister
P1_FX_EN_OUT	Open
P1_SD_P	Connect to GND via Pull-down resister
P1_SD_N	Connect to GND via Pull-down resister
P24	Connect to GND via Pull-down resister
P32	Open
P33	Open
P34	Open
P52	Open
P55	Open
P57	Open
P62	Connect to GND via Pull-down resister
P63	Connect to GND via Pull-down resister
P64	Connect to GND via Pull-down resister
P65	Connect to GND via Pull-down resister
P66	Connect to GND via Pull-down resister
P67	Connect to GND via Pull-down resister
P70	Connect to GND via Pull-down resister
P71	Connect to GND via Pull-down resister
P73	Connect to GND via Pull-down resister
P74	Connect to GND via Pull-down resister
P75	Connect to GND via Pull-down resister
P77	Connect to GND via Pull-down resister

11. Default Factory Setting

11.1. DIP-SW

SW	Value
SW1	All OFF

11.2. MAC Address

We specify the MAC address with the sticker in the board solder side.

It is stored in the following memory areas

Serial flash memory : 6 bytes from 0x003F_F000

Attention:
When just use an MAC address; the address domain mentioned above
Please do not do removal or renewal.

12. Substrate Outline Drawing

12.1. Board Component Side

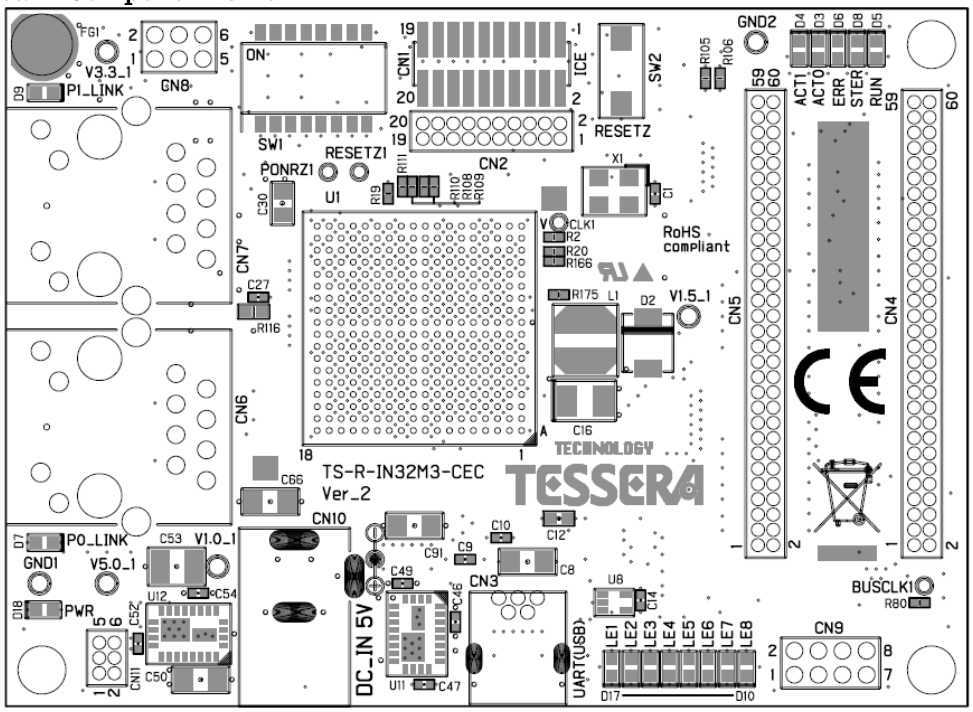

12.2. Board Soldering Side

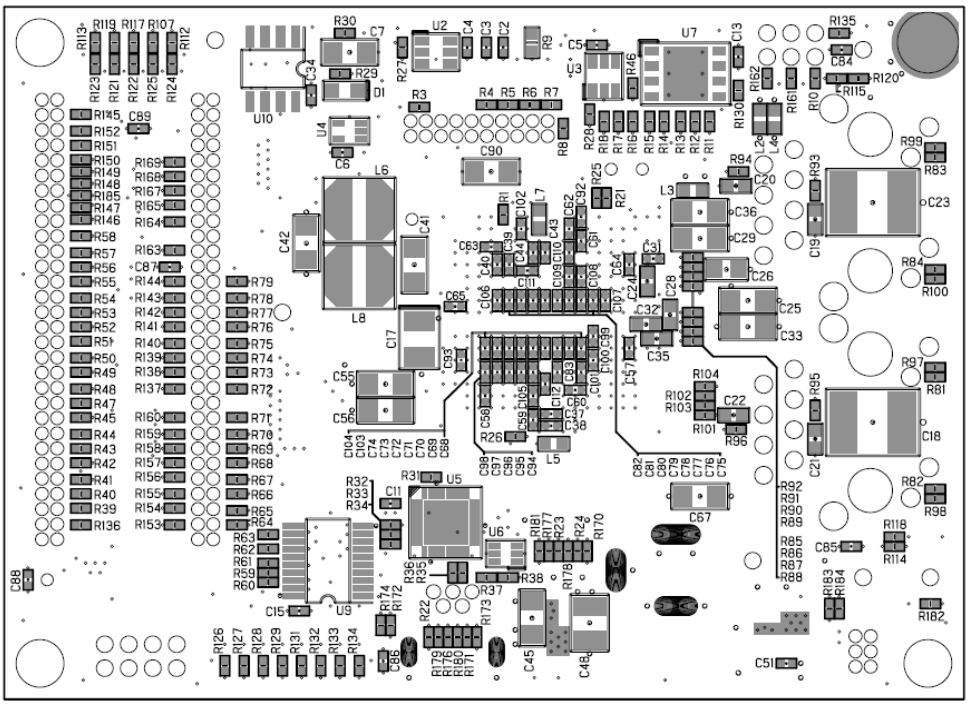

12.3. External Configuration Size