CF-850/F1KM-176-S
Hardware Manual

Date published: May 2018 (1st Edition)
Tessera Technology Inc.
TS-TUM06992

CAUTION:

- The information in this document is subject to change without notice.
- No part of this document may be copied or reproduced in any form or by any means without prior written consent of Tessera Technology Inc.
- Tessera Technology Inc. assumes no responsibility for inaccuracies or misprints of this document.
- Tessera Technology Inc. does not assume any liability for infringement of patents, copyrights or other intellectual property rights of third parties by or arising from the use of Tessera Technology Inc. products listed in this document or any other liability arising from the use of such products. No license, express, implied or otherwise, is granted under any patents, copyrights or other intellectual property rights of Tessera Technology Inc. or others.
- Descriptions of circuits, software and other related information in this document are provided for illustrative purposes in semiconductor product operation and application examples. The incorporation of these circuits, software and information in the design of a customer's equipment shall be done under the full responsibility of the customer. Tessera Technology Inc. assumes no responsibility for any losses incurred by customers or third parties arising from the use of these circuits, software and information.

TABLE OF CONTENTS

1 INTRODUCTION 4

2 FEATURES 5

2.1 CAN 6

2.2 SERIAL SELECT 9

2.2.1 LCD 11

2.2.2 RS-232C 14

2.2.3 USB Serial Conversion 15

2.2.4 LIN 16

2.3 PUSH SWITCH 17

2.4 VOLUME 18

2.5 POWER 19

2.6 CPU BOARD 20

2.6.1 Power 21

2.6.2 CPU 21

2.6.3 Clock 22

2.6.4 Reset 22

2.6.5 Switch & LED 23

2.6.6 Debug Connector 24

2.6.7 Filter socket 25

2.6.8 Check Pin 25

2.6.9 Device Select 26

3 CPU TERMINAL CONNECTION LIST 26

1 Introduction

In this document, features and hardware specifications of CF-850/F1KM-176-S, which the 32-bit single-chip microcomputer RH850/F1KM-S4, RH850/F1K and RH850/F1L from Renesas Electronics Corporation is mounted, are described.

2 Features

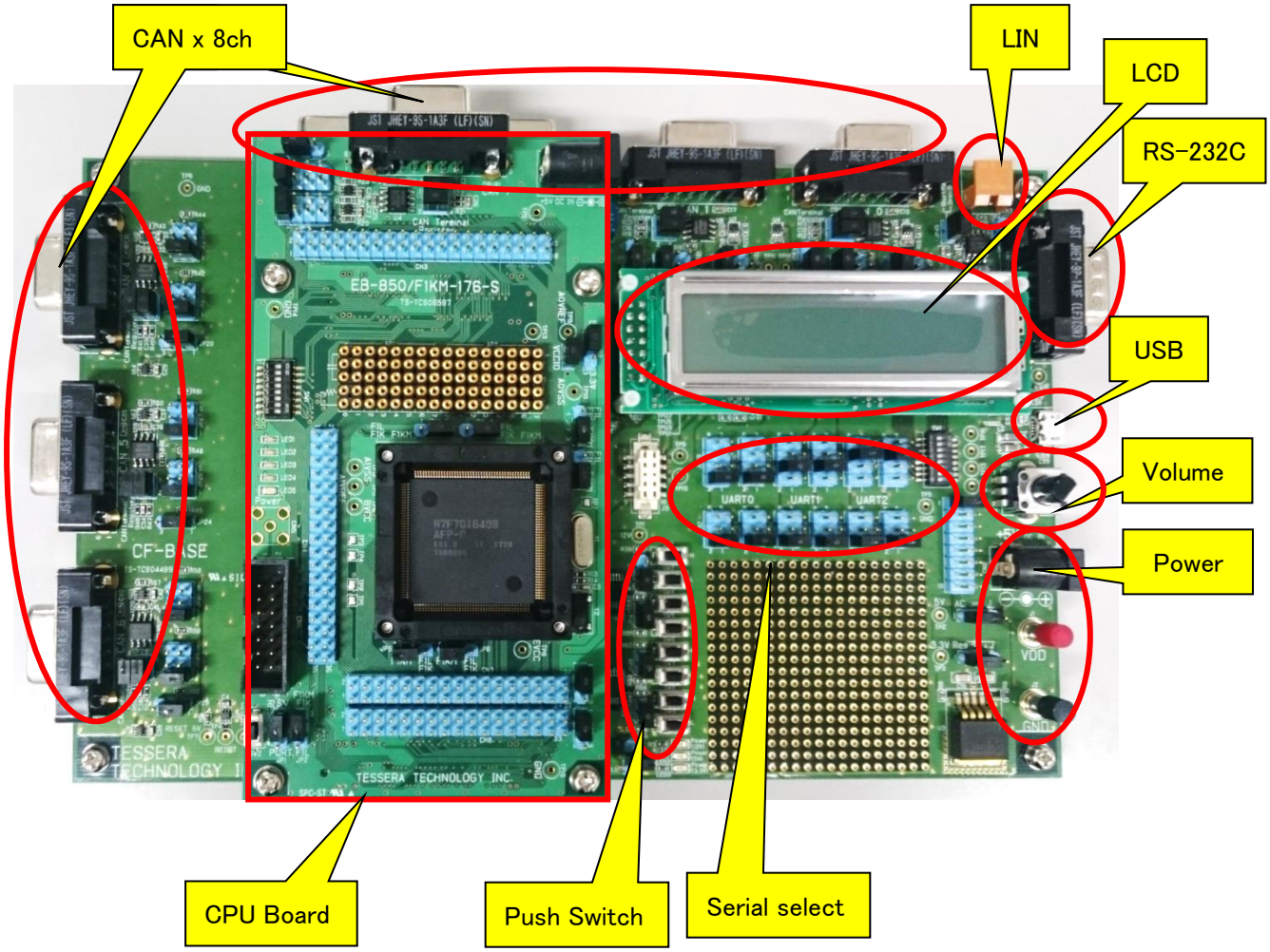
CAN x 8ch
LIN
LCD
RS-232C
USB
Volume
Power
CPU Board
Push Switch
Serial select

2.1 CAN

The CAN controller of the microcomputer is connected to the CAN FD transceiver (TJA1044GT). It supports CAN physical layer. Also, CAN bus signal is connected to DSUB 9pin female connector.

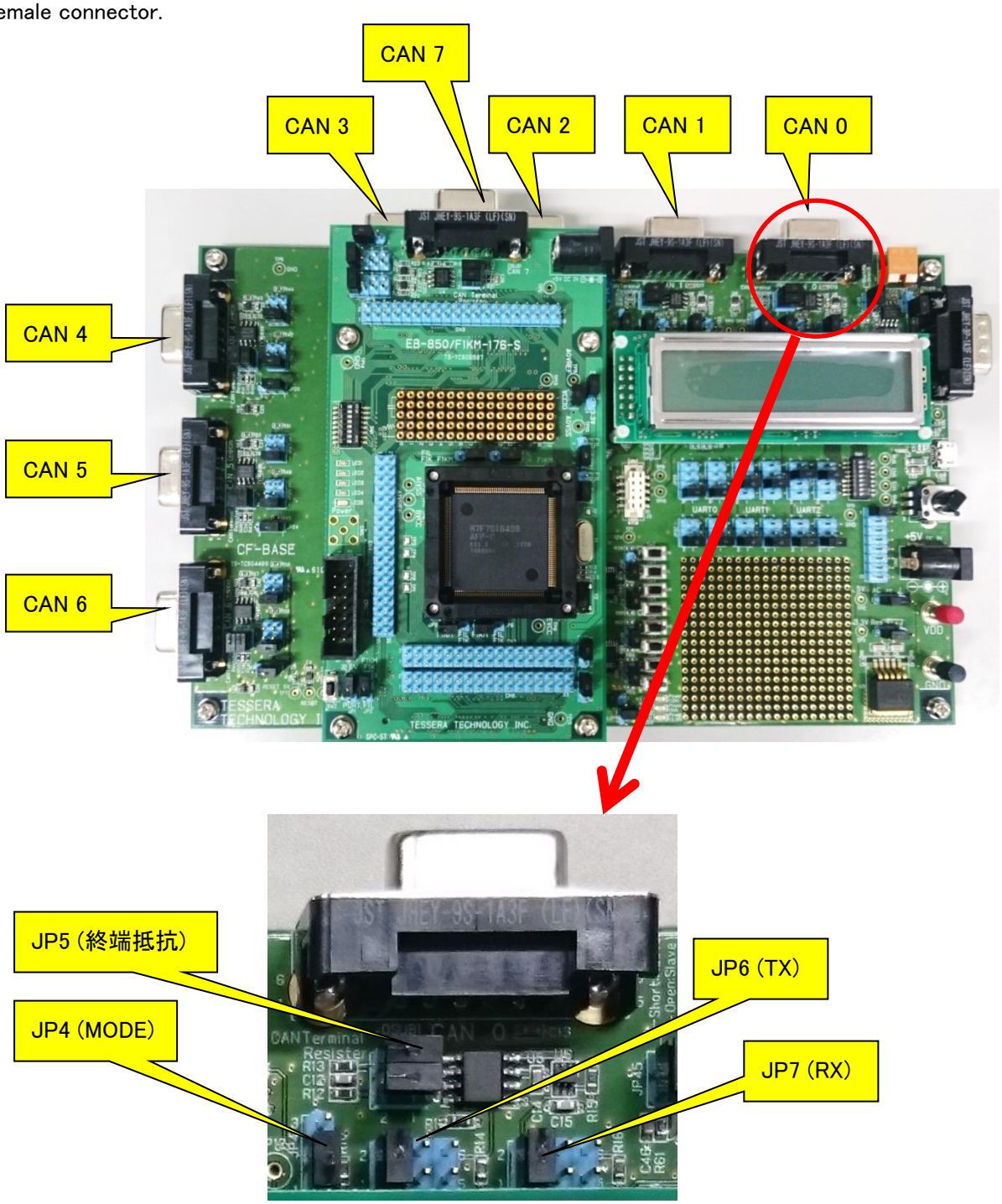

One terminal can be selected by using jumpers from maximum of three multipurpose terminals, and can be connected to CAN transceiver.

Only one line must be shorted in each jumper.

Following table shows the connection of RH850/F1KM.

	CPU Board		Jumper		Connecter
P10_1/TAUD0I3/TAUD0O3/INTP18/**CAN0TX**/PWGA1O/TAPA0UN/CSIH1SC/ETNB0RXD0/MEMC0A20/MODE0/TAUJ3I0/TAUJ3O0		TxD	JP6	1-2	CAN 0
P0_0/TAUD0I2/TAUD0O2/RLIN20RX/**CAN0TX**/PWGA10O/CSIH0SSI/DPO/TAUJ2I1/TAUJ2O1				3-4	
				5-6	
P10_0/TAUD0I1/TAUD0O1/**CAN0RX**/INTP0/CSCXFOUT/PWGA0O/TAPA0UP/CSIH1SI/MEMC0A19/ETNB0RXCLK/TAUJ1I3/TAUJ1O3		RxD	JP7	1-2	
P0_1/TAUD0I4/TAUD0O4/**CAN0RX**/INTP0/RLIN20TX/PWGA11O/CSIH0SI/APO/TAUJ2I2/TAUJ2O2				3-4	
				5-6	
P9_1/INTP11/PWGA9O/TAUD0I2/TAUD0O2/KR0I5/CSIH2CSS1/ADCA0I3S/TAUJ1I2/TAUJ1O2/SENT1SPCO/RIIC1SCL		MODE0	JP4	1-2	
P0_3/TAUD0I8/TAUD0O8/RLIN30RX/INTP10/**CAN1TX**/DPIN1/PWGA13O/CSIH0SO/CXPI0RX/TAUJ1I0/TAUJ1O0		TxD	JP10	1-2	CAN 1
P10_7/TAUD0I15/TAUD0O15/CSIG0SC/ENCA0TIN1/PWGA4O/**CAN1TX**/MEMC0AD1/RLIN24TX/TAUJ3I1/TAUJ3O1				3-4	
				5-6	
P0_2/TAUD0I6/TAUD0O6/**CAN1RX**/INTP1/RLIN30TX/PWGA12O/CSIH0SC/DPO/TAUJ2I3/TAUJ2O3/CXPI0TX		RxD	JP11	1-2	
P10_6/TAUD0I13/TAUD0O13/CSIG0SO/ENCA0TIN0/ADCA0SEL2/**CAN1RX**/INTP1/MEMC0AD0/RLIN24RX/MODE2				3-4	
				5-6	
P9_2/KR0I6/PWGA20O/TAPA0ESO/CSIH2CSS2/ADCA0I9S		MODE1	JP8	1-2	
P0_4/RLIN31RX/INTP11/**CAN2TX**/PWGA10O/CSIH1SI/SELDP0/DPIN8/CXPI1RX/TAUB0I12/TAUB0O12		TxD	JP14	1-2	CAN 2
P12_0/**CAN2TX**/PWGA56O/TAUB1I10/TAUB1O10/CSIG2SSI/MEMC0A16/RLIN36RX/INTP16				3-4	
				5-6	
P0_5/**CAN2RX**/INTP2/RLIN31TX/DPIN9/SELDP1/CSIH1SO/TAUB0I14/TAUB0O14/CXPI1TX		RxD	JP15	1-2	
P11_15/**CAN2RX**/INTP2/CSIH2CSS4/PWGA55O/TAUB1I8/TAUB1O8/MEMC0ASTB/ETNB0RXERR/RLIN36TX				3-4	
				5-6	
P9_3/KR0I7/PWGA21O/CSIH2CSS3/TAUJ1I1/TAUJ1O1/INTP16/ADCA0I10S		MODE2	JP12	1-2	
P0_8/INTP16/RLIN21TX/DPIN6/CSIH0CSS6/CSIH1SSI/TAUB0I2/TAUB0O2/**CAN3TX**		TxD	JP18	1-2	CAN 3
P11_4/CSIH2SI/**CAN3TX**/INTP21/PWGA29O/TAUB1I3/TAUB1O3/MEMC0AD12/SFMA0IO1				3-4	
P1_3/INTP19/**CAN3TX**/DPIN23/TAUJ2I3/TAUJ2O3				5-6	
P0_7/RLIN21RX/DPIN5/CSCXFOUT/CSIH1RYI/CSIH1RYO/TAUB0I0/TAUB0O0/**CAN3RX**/INTP3		RxD	JP19	1-2	
P11_3/CSIH2SC/**CAN3RX**/INTP3/PWGA28O/TAUB1I1/TAUB1O1/MEMC0AD11/RLIN32TX/SFMA0IO2/CXPI2TX				3-4	
P1_2/**CAN3RX**/INTP3/DPIN19/TAUJ2I2/TAUJ2O2				5-6	
P9_4/CSIH0CSS5/PWGA33O/TAUJ1I0/TAUJ1O0/INTP17/ADCA0I11S		MODE3	JP16	1-2	
P0_10/INTP3/CSIH1CSS1/DPIN11/RLIN22TX/TAUB0I6/TAUB0O6/**CAN4TX**		TxD	JP22	1-2	CAN 4
P20_3/**CAN4TX**/PWGA67O/RLIN29TX/CSIG3RYI/CSIG3RYO				3-4	
P1_13/**CAN4TX**/RLIN36RX/INTP16				5-6	
P0_9/INTP12/CSIH1CSS0/DPIN7/RLIN22RX/TAUB0I4/TAUB0O4/**CAN4RX**/INTP4		RxD	JP23	1-2	
P20_2/**CAN4RX**/INTP4/PWGA66O/RLIN29RX/CSIG3SC				3-4	
P1_12/**CAN4RX**/INTP4/RLIN36TX				5-6	
P0_11/RIIC0SDA/DPIN12/CSIH1CSS2/TAUB0I8/TAUB0O8/RLIN26RX/PWGA34O		MODE4	JP20	1-2	
P0_14/INTP17/RLIN32TX/PWGA47O/TAUB0I14/TAUB0O14/CSIG0SC/**CAN5TX**/CXPI2TX		TxD	JP26	1-2	CAN 5
P11_6/RLIN33RX/INTP13/**CAN5TX**/ADCA1TRG1/PWGA31O/CSIH3SO/TAUB1I7/TAUB1O7/MEMC0AD14/SFMA0SSL/CXPI3RX				3-4	
				5-6	
P0_13/RLIN32RX/INTP12/PWGA46O/TAUB0I12/TAUB0O12/CSIG0SO/**CAN5RX**/INTP5/CXPI2RX		RxD	JP27	1-2	
P11_5/**CAN5RX**/INTP5/RLIN33TX/PWGA30O/CSIH3SI/TAUB1I5/TAUB1O5/MEMC0AD13/SFMA0IO0/CXPI3TX				3-4	
				5-6	
P0_12/RIIC0SCL/DPIN13/PWGA45O/TAUB0I10/TAUB0O10/CSIG0SI/RLIN26TX		MODE5	JP24	1-2	
P10_4/TAUD0I9/TAUD0O9/RLIN21RX/**CAN6TX**/KR0I2/ADCA0SEL0/ADCA0TRG2/TAPA0WP/CSIG0SSI/PWGA53O/ETNB0RXD2/MEMC0A22		TxD	JP30	1-2	CAN 6
P8_1/TAPA0ESO/TAUJ0O1/DPIN0/PWGA15O/INTP5/CSIH1CSS3/**CAN6TX**/ADCA0I1S/RIIC1SCL/SENT0SPCO				3-4	
P20_1/RLIN26TX/PWGA65O/**CAN6TX**/CSIG3SO	JP15:1-2			5-6	
P2_1/RLIN27TX/**CAN6TX**	JP15:2-3				
P10_5/TAUD0I11/TAUD0O11/**CAN6RX**/INTP6/RLIN21TX/KR0I3/ADCA0SEL1/TAPA0WN/CSIG0RYI/CSIG0RYO/ETNB0RXD3/PWGA54O		RxD	JP31	1-2	
P8_0/TAUJ0I0/TAUJ0O0/DPIN2/PWGA14O/INTP4/CSIH0CSS0/**CAN6RX**/INTP6/ADCA0I0S/RIIC1SDA/SENT0RX				3-4	
P20_0/RLIN26RX/PWGA64O/INTP6/**CAN6RX**/CSIG3SI	JP16:1-2			5-6	
P2_0/RLIN27RX/INTP6/**CAN6RX**	JP16:2-3				
P8_7/CSIH3CSS0/PWGA39O/ADCA0SEL0/RTCA0OUT/ADCA0I14S		MODE6	JP28	1-2	
P8_3/TAUJ0I1/TAUJ0O1/DPIN3/CSIH0CSS1/INTP7/PWGA23O/**CAN7TX**/ADCA0I5S	JP11	TxD	–	1-2	CAN 7 CPU Board
P10_13/CSIH0SSI/PWGA18O/**RLIN32RX**/INTP12/FLXA0TXENB/TAUB0I5/TAUB0O5/MEMC0AD7/**CAN7TX**/CXPI2RX				3-4	
P20_5/RLIN23TX/INTP23/PWGA60O/**CAN7TX**				5-6	
P1_15/RLIN23TX/**CAN7TX**				7-8	
P8_4/TAUJ0I2/TAUJ0O2/DPIN4/CSIH0CSS2/INTP8/PWGA36O/**CAN7RX**/INTP9/ADCA0I6S	JP12	RxD	–	1-2	
P10_14/ADCA1TRG0/PWGA19O/FLXA0RXDA/RLIN32TX/CSIH3SSI/TAUB0I7/TAUB0O7/MEMC0AD8/**CAN7RX**/INTP9/CXPI2TX				3-4	
P20_4/RLIN23RX/INTP22/PWGA59O/**CAN7RX**/INTP9/CSIG3SSI				5-6	
P1_14/RLIN23RX/**CAN7RX**/INTP9				7-8	
P11_1/CSIH2SSI/FLXA0TXDA/RLIN20RX/CSIH0CSS7/INTP20/PWGA26O/TAUB0I13/TAUB0O13/MEMC0AD9	JP13	MODE7	–	1-2	
				Default	

JP5, JP9, JP13, JP17, JP21, JP25, JP29 and JP14(CPU Board) are termination resistor connect.

Open or short these as needed.

CAN 0, 1, 2, 3, 4, 5, 6, 7 DSUB Connector	
Pin Number	Signal Name
1	N.C.
2	**CANL**
3	**GND**
4	N.C.
5	0.1uF→ GND
6	N.C.
7	**CANH**
8	N.C.
9	N.C.

		Termination resistor
JP5 : CAN 0 JP9 : CAN 1 JP13:CAN 2 JP17:CAN 3 JP21: CAN 4 JP25: CAN 5 JP29: CAN 6 JP14: CAN 7 (CPU Board)	1-2 Short 3-4 Short	120Ω
	1-2 Open 3-4 Open	Non

About the MODE signal

The MODE signal is connected to the STB terminal of the CAN driver IC (TJA1044GT).

If not controlled by the port, changing the jumper pin to 2-3 short circuit will be fixed to Low, and it can always be in the normal state.

Connection diagram

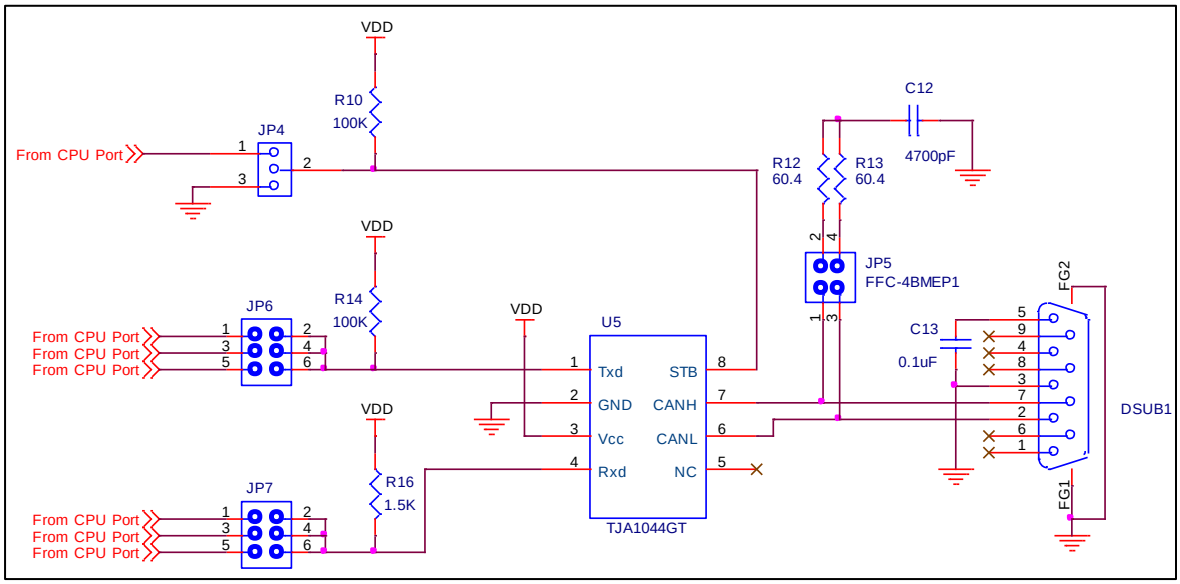

2.2 Serial select

It can be connected by selecting the microcomputer's UART terminal to "LCD", "RS-232C", "USB Serial Conversion", and "LIN".

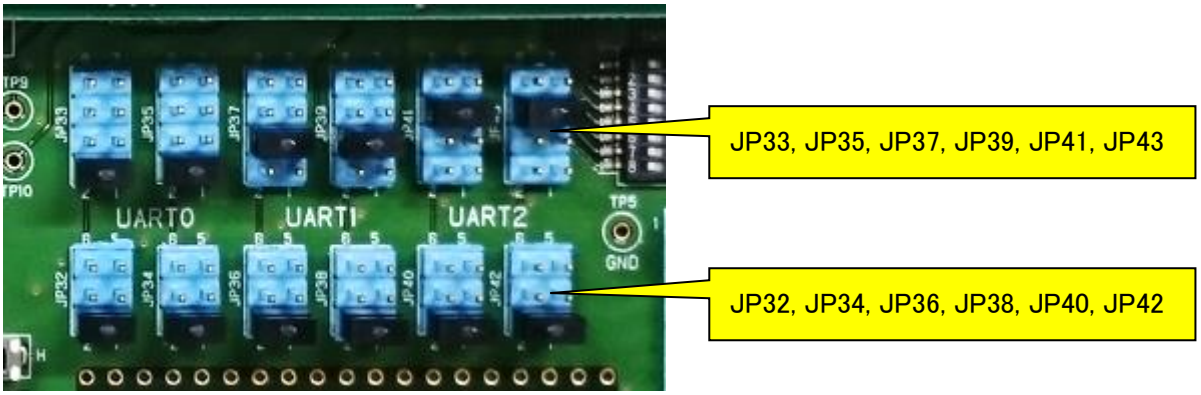

The terminals for using UART can be selected by jumpers.

P10_10/TAUD0I14/TAUD0O14/**RLIN30TX**/ENCA0E1/PWGA7O/CSIH0CSS1/MEMC0AD4/CXPI0TX/TAUJ3I3/TAUJ3O3	TxD	JP32	1-2	UART0
P1_1/INTP18/**RLIN33TX**/CXPI3TX/TAUJ2I1/TAUJ2O1			3-4	
P11_5/**CAN5RX**/INTP5/**RLIN33TX**/PWGA3OO/CSIH3SI/TAUB1I5/TAUB1O5/MEMC0AD13/SFMA0IO0/CXPI3TX			5-6	
P10_9/TAUD0I12/TAUD0O12/**RLIN30RX**/INTP10/ENCA0E0/PWGA6O/CSIH0RYI/CSIH0RYO/MEMC0AD3/FLXA0RXDB/CXPI0RX	RxD	JP34	1-2	
P1_0/**RLIN33RX**/INTP13/CXPI3RX/TAUJ2I0/TAUJ2O0			3-4	
P11_6/**RLIN33RX**/INTP13/**CAN5TX**/ADCA1TRG1/PWGA31O/CSIH3SO/TAUB1I7/TAUB1O7/MEMC0AD14/SFMA0SSL/CXPI3RX			5-6	
P10_12/PWGA17O/FLXA0STPWT/**RLIN31TX**/CSIH1CSS1/TAUB0I3/TAUB0O3/MEMC0AD6/CXPI1TX	TxD	JP36	1-2	UART1
P1_9/DPIN20/INTP21			3-4	
P12_2/INTP19/**RLIN34TX**/PWGA58O/TAUB1I14/TAUB1O14/MEMC0A18/CSIG2RYI/CSIG2RYO			5-6	
P10_11/PWGA16O/**RLIN31RX**/INTP11/FLXA0TXENA/CSIH1CSS0/TAUB0I1/TAUB0O1/MEMC0AD5/CXPI1RX	RxD	JP38	1-2	
P1_8			3-4	
P12_1/**RLIN34RX**/INTP14/CSIH2CSS5/PWGA57O/TAUB1I12/TAUB1O12/MEMC0A17			5-6	
P10_14/ADCA1TRG0/PWGA19O/FLXA0RXDA/**RLIN32TX**/CSIH3SSI/TAUB0I7/TAUB0O7/MEMC0AD8/**CAN7RX**/INTP9/CXPI2TX	TxD	JP40	1-2	UART2
P1_5/ADCA1TRG0/**RLIN35TX**/DPIN17/INTP20			3-4	
P11_8/CSIG1SSI/**RLIN35TX**/PWGA48O/TAUB1I11/TAUB1O11/MEMC0CS0			5-6	
P10_13/CSIH0SSI/PWGA18O/**RLIN32RX**/INTP12/FLXA0TXENB/TAUB0I5/TAUB0O5/MEMC0AD7/**CAN7TX**/CXPI2RX	RxD	JP42	1-2	
P1_4/**RLIN35RX**/INTP15/DPIN18			3-4	
P11_9/CSIG1SO/**RLIN35RX**/INTP15/PWGA49O/TAUB1I13/TAUB1O13/MEMC0CS1			5-6	
			Default	

The connection destination of each UART can be selected with the jumper switch shown below.

UART0_TXD	JP33	1-2(LCD)
UART0_RXD	JP35	1-2(LCD)
UART1_TXD	JP37	3-4(USB)
UART1_RXD	JP39	3-4(USB)
UART2_TXD	JP41	5-6(RS)
UART2_RXD	JP43	5-6(RS)

Short position	Connection destination
1-2	LCD
3-4	USB
5-6	RS-232C
7-8	LIN

Connection diagram

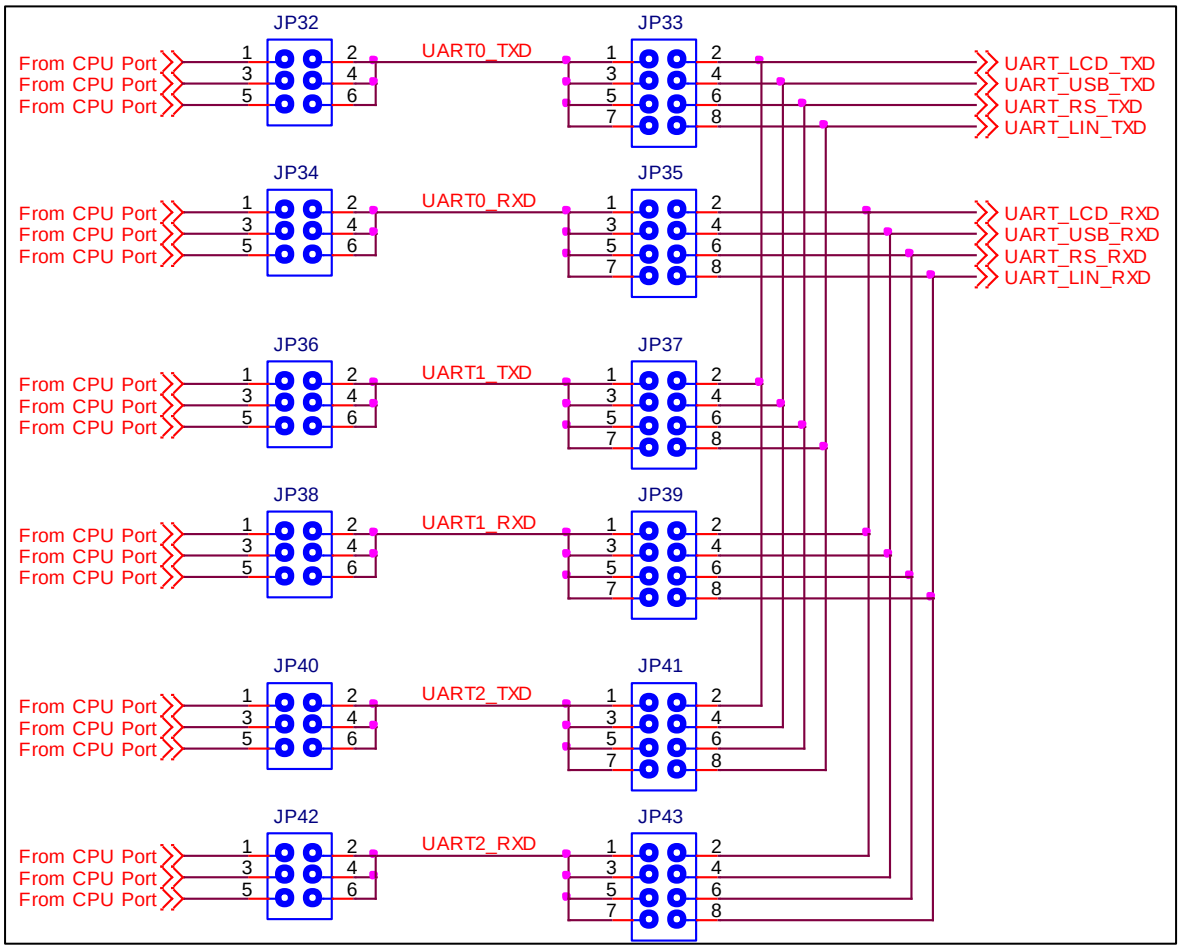

2.2.1 LCD

Words can be displayed on LCD panel by sending data to UART that is connected to LCD. "Binary mode" to display hexadecimal and "ASCII mode" to display ASCII characters can be selected by the DIP switch (SW1).

Initial screen displays when you press the reset switch on CPU board.

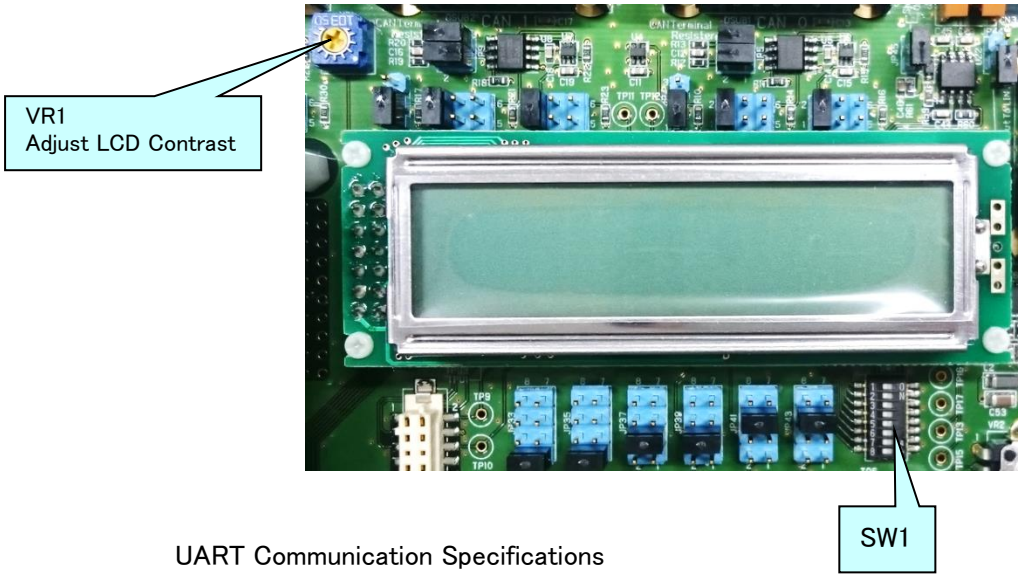

UART Communication Specifications

- Baud Rate 115.2Kbps (Fixed)
- Data Length 8bit (LSB First)
- Parity None
- Stop Bit 1bit
- Flow Control None (continuous transmission enabled)

Binary Mode 1 (SW1_1:ON, SW1_2:ON, SW1_3:Any)

It displays the hexadecimal data as sent with entering space between 1Byte data.

It can display 10Byte in 1 screen. It scrolls 1 line when it received 11Byte of data.

(example) URTH?TX = 0x01; TXWait();

URTH?TX = 0x02; TXWait();

.....

URTH?TX = 0x0A; TXWait();

0	1		0	2		0	3		0	4		0	5		
0	6		0	7		0	8		0	9		0	A		

URTH?TX = 0x10; TXWait();

0	6		0	7		0	8		0	9		0	A		
1	0														

(use case) By developing a program to send 10Byte once in 1 second, it will display the first 1Byte at the top-left of the screen.

Binary Mode 2 (SW1_1:ON, SW1_2:OFF, SW1_3:ON)

It displays the hexadecimal data as sent without entering space between 1Byte data.

It can display 16Byte in 1 screen. It scrolls 1 line when it received 17Byte of data.

(example) URTH?TX = 0x01; TXWait();

URTH?TX = 0x02; TXWait();

・・・・・・・・・・

URTH?TX = 0x10; TXWait();

0	1	0	2	0	3	0	4	0	5	0	6	0	7	0	8
0	9	0	A	0	B	0	C	0	D	0	E	0	F	1	0

URTH?TX = 0x11; TXWait();

0	9	0	A	0	B	0	C	0	D	0	E	0	F	1	0
1	1														

(use case) By developing a program to send 16Byte once in 1 second, it will display the first 1Byte at the top-left of the screen.

ASCII Mode Ver.2 (SW1_1:OFF, SW1_2:Any, SW1_3:Any)

It displays the characters as sent.

It can display 16 characters in 1 line. It scrolls 1 line when it received 17th character or linefeed code (0x0D: ¥r).

(example) URTH?TX = 'F'; TXWait();

URTH?TX = 'l'; TXWait();

.....

URTH?TX = 'T'; TXWait();

F	l	e	x	R	a	y								
T	E	S	T											

URTH?TX = '¥r'; TXWait();

URTH?TX = '1'; TXWait();

T	E	S	T											
1														

The position of the cursor can be specified by sending xy-coordinate right after ESC code (0x1B).

ESC(0x1B) + xy x: 0(0x30)～9(0x39),a(0x61), b, c, d, e, f(0x66)

y: 0(0x30),1(0x31)

(example) printf(buf, "¥x1b00TEST¥x1ba1LCD");

y ↓																
0	T	E	S	T												
1											L	C	D			
X →	0	1	2	3	4	5	6	7	8	9	a	b	c	d	e	f

2.2.2 RS-232C

UART that is connected to "RS-232C" can send and receive signals with the RS-232C level of D-SUB9 pin connector.

Use a cross cable when you connect to PC.

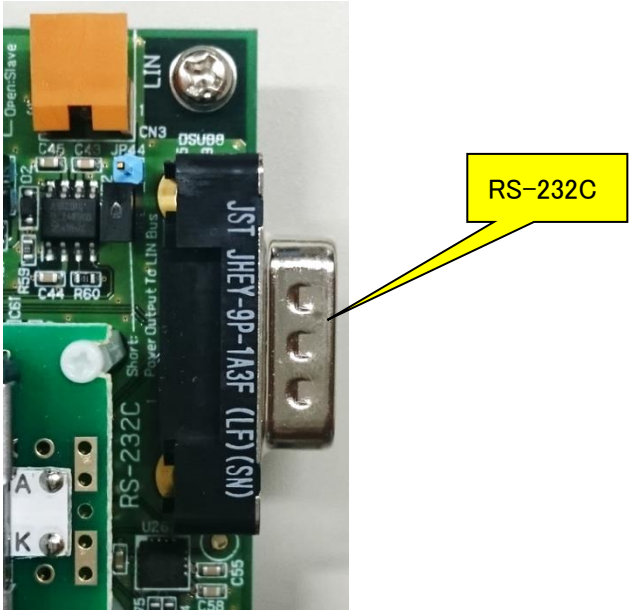

RS-232C D-SUB Connector	
Pin Number	Signal
1	N.C.
2	**RxD**
3	**TxD**
4	N.C.
5	GND
6	N.C.
7	RTS(N.C.)
8	CTS(N.C.)
9	N.C.

2.2.3 USB Serial Conversion

UART that is connected to "USB serial conversion" can communicate with the COM port of PC through USB controller (FT230).

If the USB driver is a PC connected to the Internet, the latest driver is automatically installed by "Windows Update". Please wait until the pop-up "Device is ready to use" appears.

If the driver is not installed, it can be downloaded from the following URL.

http://www.ftdichip.com/Drivers/VCP.htm

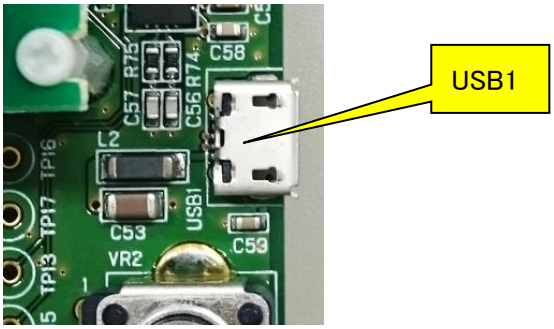

Recommended UART communication specification

- Baud rate 115.2Kbps
- Data length 8bit (LSB First)
- Parity None
- Stop Bit 1bit
- Flow Control None

2.2.4 LIN

The UART connected to "LIN" is connected to the LIN compatible transceiver (TJA1020T) and corresponds to the physical layer of LIN.

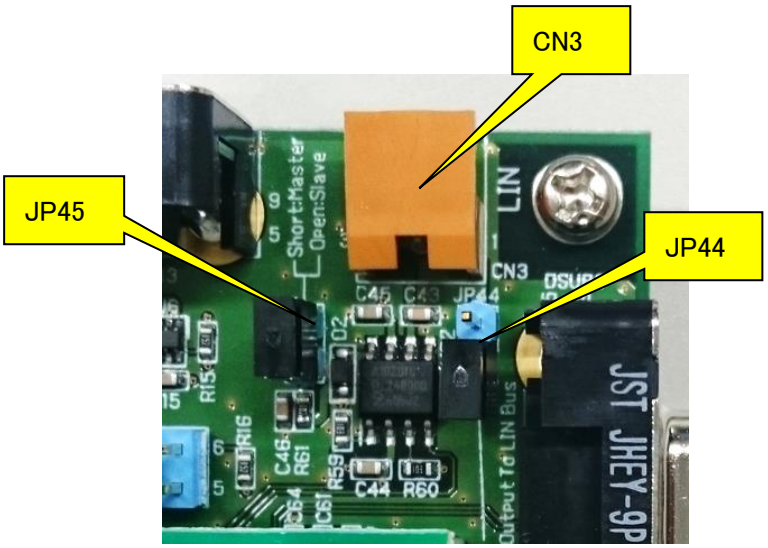

Default setting JP44: Open

JP45: Short (LIN Master)

CN3 : IL-G-3P-S3L2-SA (JAE)

CN3	Function
1	JP44 short circuit output +12V
2	GND
3	LIN

JP45	Function
Short	LIN Master
Open	LIN Slave

2.3 Push Switch

4 interrupt signals can be connected to microcomputer's interrupt terminals. The signal can be set to High by pressing H button, and to Low by pressing L button. It becomes High by reset signal of the CPU.

Also, it has chattering prevention circuit.

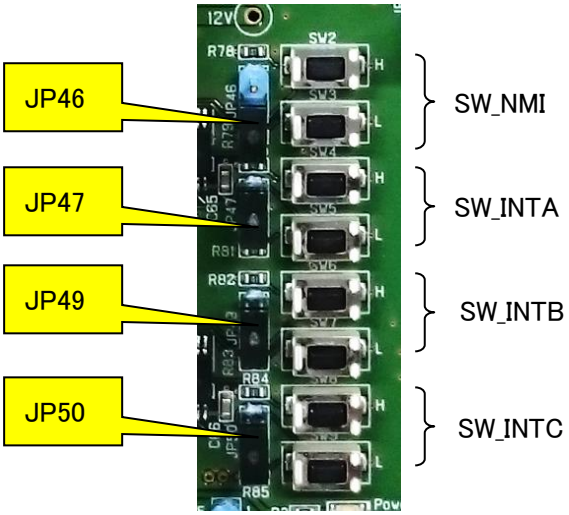

The interrupt signals are disconnected by taking each jumper pin out.

		Jumper	Switch	Signal
P9_0/**NMI**/PWGA8O/TAUD0I0/TAUD0O0/ADCA0TRG0/CSIH2CSS0/KR0IN4/ADCA0AD4S/TAUJ1I1/TAUJ1O1/CENTRX/RIIC1SDA	NMI	JP46:Open	SW2/3	SW_NMI
P0_6/**INTP2**/DPIN10/SELDP2/CSIH1SC/PWGA35O	INTP2	JP47: Short	SW4/5	SW_INTA
P11_7/**INTP5**/PWGA32O/CSIH3SC/TAUB1I9/TAUB1O9/MEMC0AD15/SFMA0CLK	INTP5	JP49: Short	SW6/7	SW_INTB
P8_2/TAUJ0I0/TAUJ0O0/DPIN2/CSIH0CSS0/**INTP6**/PWGA22O/RLIN37TX/ADCA0I4S	INTP6	JP50: Short	SW8/9	SW_INTC

2.4 Volume

It can output variable voltage (0V-IO voltage) to A/D terminal of CPU by variable resistor of 10KΩ.

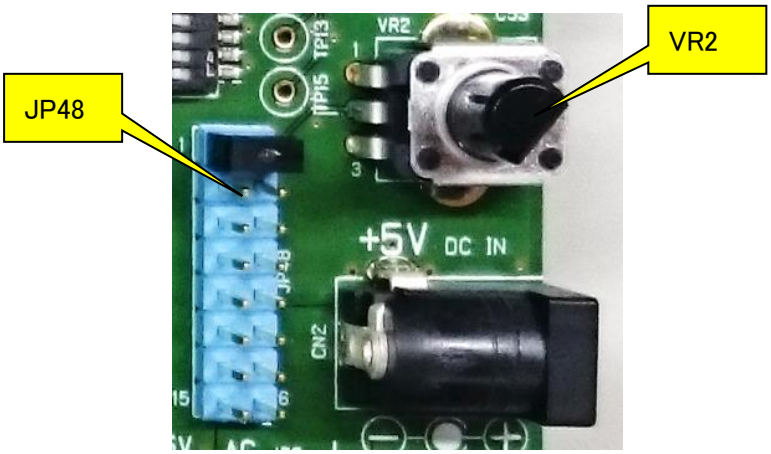

	JP48
AP0_0/ADCA0I0	1-2
AP0_1/ADCA0I1	3-4
AP0_2/ADCA0I2	5-6
AP0_3/ADCA0I3	7-8
AP0_4/ADCA0I4	9-10
AP0_5/ADCA0I5	11-12
AP0_6/ADCA0I6	13-14
AP0_7/ADCA0I7	15-16

2.5 Power

Connect bundled AC adapter (+5V) to AC Jack. You do not need to connect to the AC Jack on the CPU board.

Using the regulator from the power supplied from here, + 12V and + 3.3V are also generated.

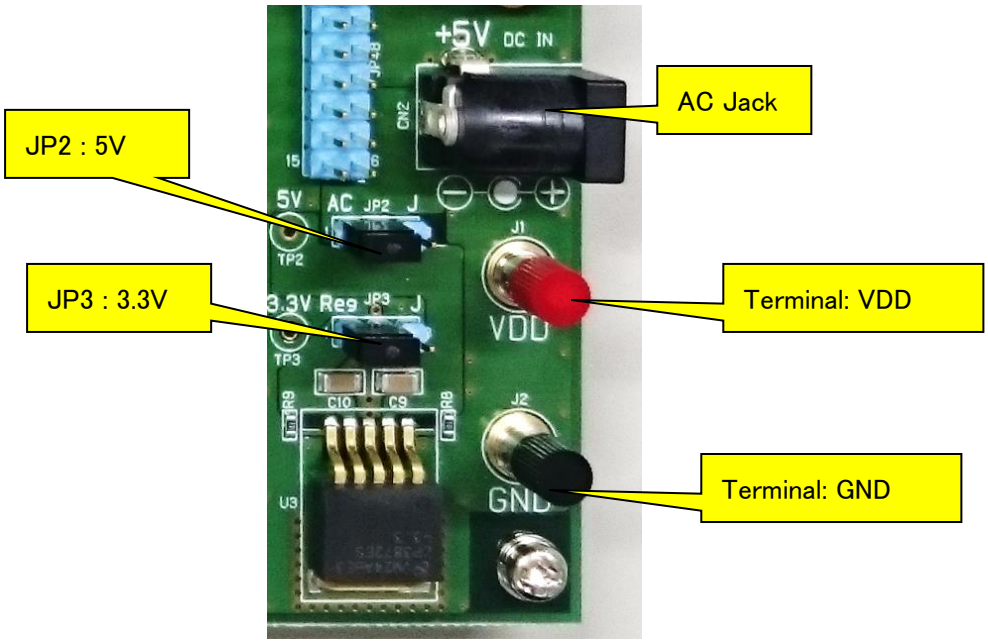

Power supply source can be changed by JP2 and JP3.

JP2	1-2	AC adapter
5V	2-3	Terminal
JP3	1-2	Regulator
3.3V	2-3	Terminal

JP1 is the jumper to fix the IO voltage when it does not connect CPU board. Normally, do not short this.

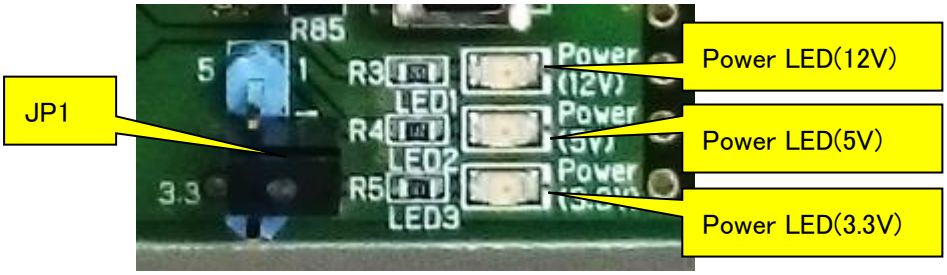

2.6 CPU Board

"EB-850/F1KM-176-S" is mounted on the CPU board

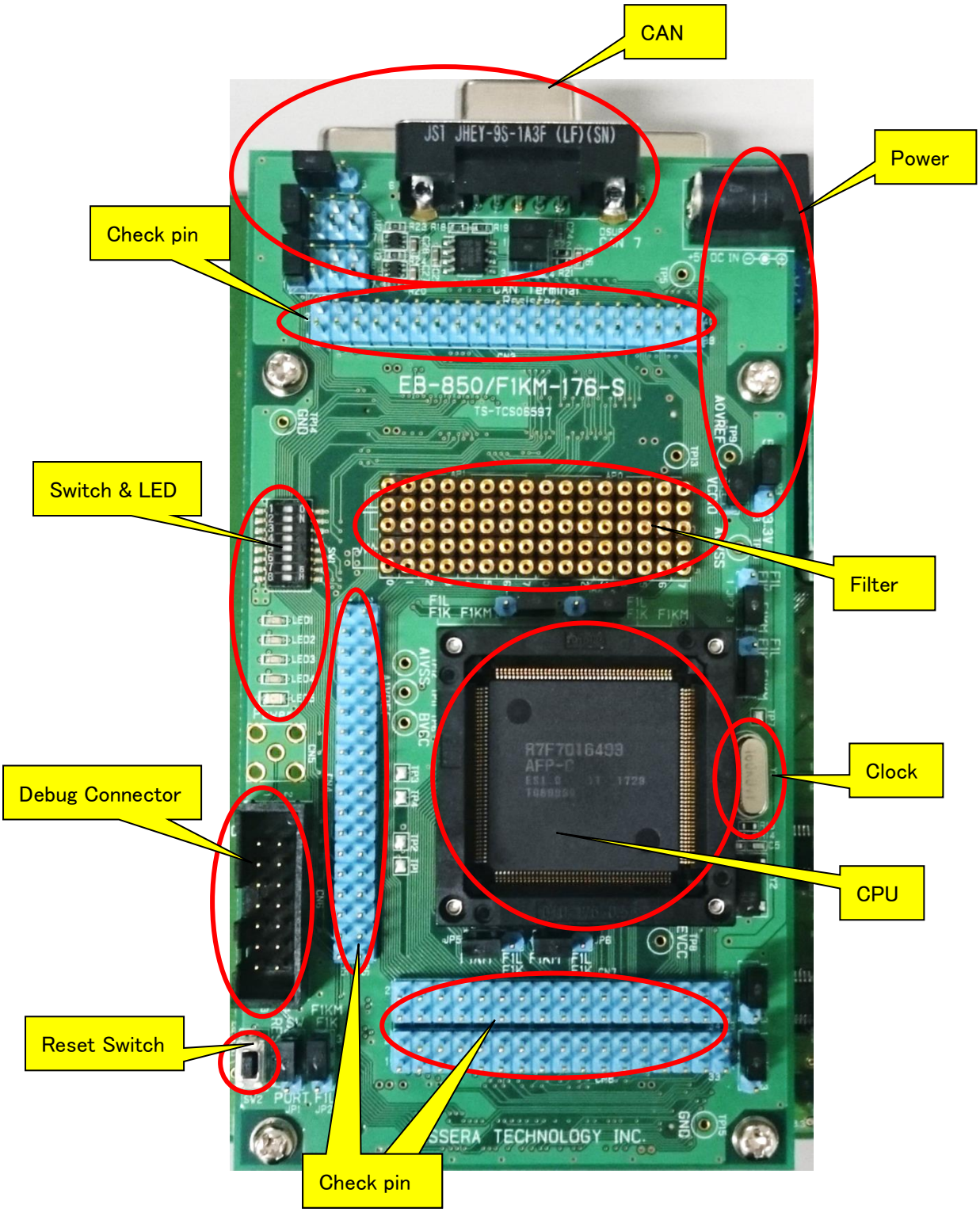

2.6.1 Power

There is a jumper pin for measuring the current when you use only CPU board itself.

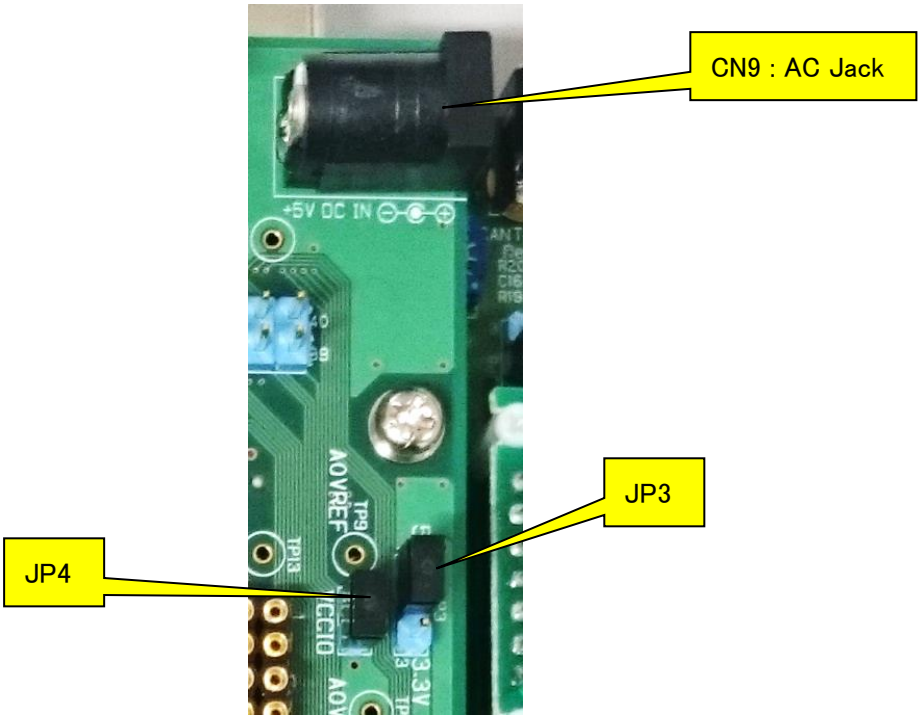

No.	Select	Note
JP4	Short	Connect ammeter to check the current
JP3	1-2	Operation voltage is 5V.
	2-3	Operation voltage is 3.3V. (Only when CF-BASE board is connected)

2.6.2 CPU

For "EB-850/F1KM-176-S", only socket is mounted. Make sure the position of 1pin when you mount CPU.

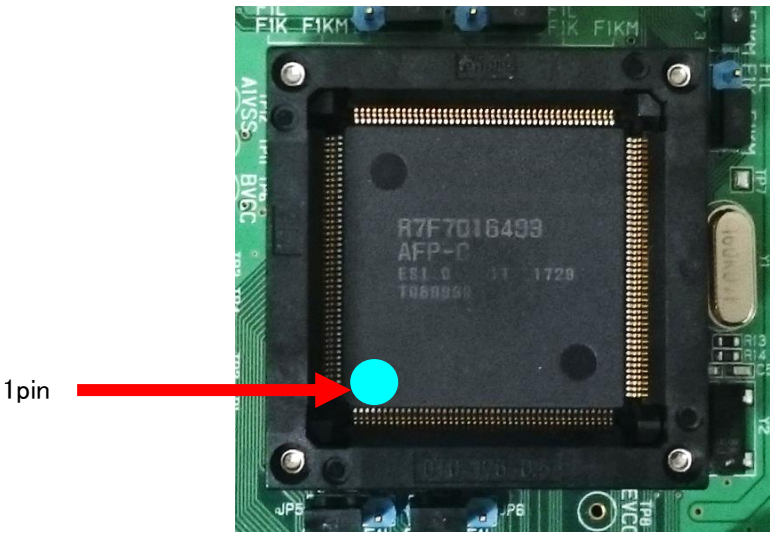

2.6.3 Clock

For the X1 and X2 of the CPU, 16**MHz** crystal oscillator (Y1) is mounted on the socket.

For the XT1 and XT2 of the CPU, 32.768KHz crystal oscillator (Y2) is connected.

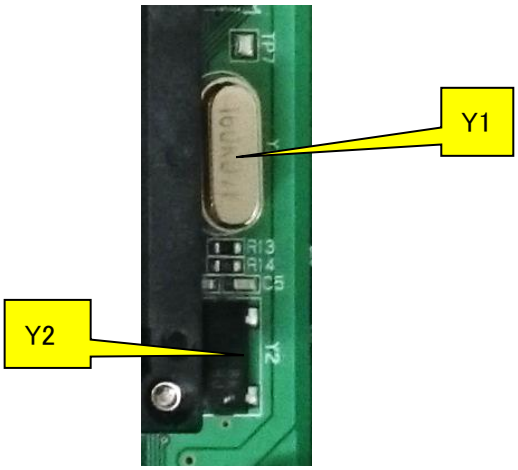

2.6.4 Reset

CPU can be reset by pressing the Reset switch (SW2).

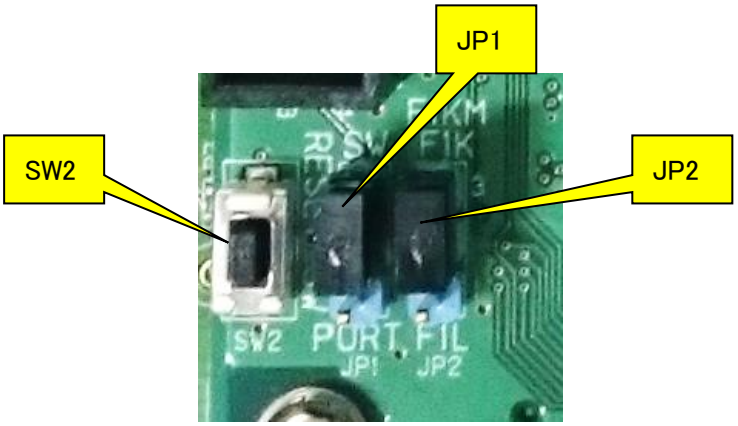

As a reset input method to the CF-BASE board, it is possible to select either the reset switch (SW 2) or press the CPU port terminal (F1L: P0_0 or F1K: P8_6) with a jumper pin.

No.	Select	Notes
JP1	1-2	CPU Port(JP2 setting)
	2-3	Reset Switch
JP2	1-2	P0_0 : RH850/F1L
	2-3	P8_6 : RH850/F1KM、RH850/F1K

2.6.5 Switch & LED

They are connected to port terminals of the CPU.

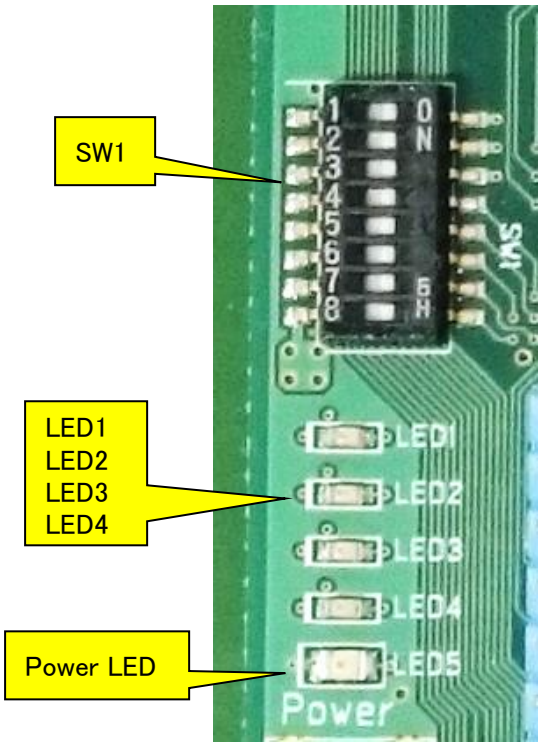

- P8_12, P10_3, and P8_5 can be used for the switch inputs.
  It connects the pull-up resistor with built-in CPU. Set the switch to OFF to read High and to ON to read Low.
- P8_8, P8_9, P8_10, and P8_11 can be connected to LED. Set the switch ON and output Low from the port to light the LED.
- SW1_8 is power indicator. Power LED is off when power is OFF.

	SW1	Connect to
P8_12/TAUJ1I3/TAUJ1O3/DPIN16/PWGA44O/CSIH1CSS5/INTP23/RLIN25TX/ADCA0I19S	1	GND
P10_3/TAUD0I7/TAUD0O7/RIIC0SCL/KR0I1/PWGA3O/ADCA0TRG1/TAPA0VN/CSIH1SSI/MEMC0CLK/RLIN37RX/INTP17	2	GND
P8_5/TAUJ0I3/TAUJ0O3/NMI/CSIH0CSS3/INTP9/PWGA37O/ADCA0I7S	3	GND
P8_8/CSIH3CSS1/PWGA40O/ADCA0SEL1/RLIN34RX/INTP14/ADCA0I15S	4	LED1
P8_9/CSIH3CSS2/PWGA41O/ADCA0SEL2/RLIN34TX/ADCA0I16S	5	LED2
P8_10/CSIH3CSS3/DPIN14/PWGA42O/RLIN37RX/INTP17/ADCA0I17S	6	LED3
P8_11/TAUJ1I2/TAUJ1O2/DPIN15/PWGA43O/CSIH1CSS4/RLIN25RX/ADCA0I18S	7	LED4
Power Supply	8	Power LED

2.6.6 Debug Connector

"PG-FP5" of "E1 emulator" corresponding to Low Pin Debug Interface (4-pin) or a flash programmer is connectable with CN6.

CN6

Pin Number	Signal	
	Debugger	Writer
1	DCUTCK	JP0_2
2	GND	←
3	DCUTRST	
4	FLMD0	←
5	DCUTDO	JP0_1
6	N.C.	
7	DCUTDI	JP0_0
8	VDD	←
9	DCUTMS	
10	N.C.	
11	DCUTRDY	
12	GND	←
13	RESET	←
14	GND	←

＊FLMD1 is pulldown on the board.

2.6.7 Filter socket

Filters can be implemented to A/D input terminals.

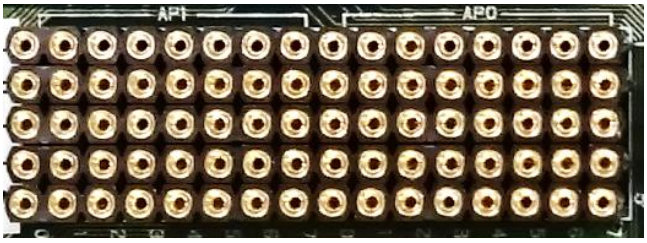

Connects (CN1, CN2) are connected through the sockets as illustrated below. Therefore, please make sure you connect resistor between the socket 4pin and 5pin when you use A/D terminal.

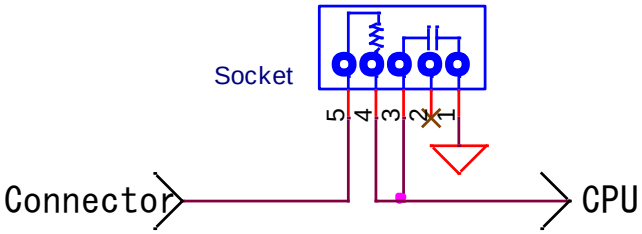

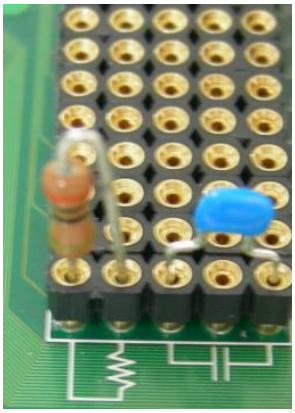

	Socket
AP0_0/ADCA0I0	AP0_0
AP0_1/ADCA0I1	AP0_1
AP0_2/ADCA0I2	AP0_2
AP0_3/ADCA0I3	AP0_3
AP0_4/ADCA0I4	AP0_4
AP0_5/ADCA0I5	AP0_5
AP0_6/ADCA0I6	AP0_6
AP0_7/ADCA0I7	AP0_7

	Socket
AP1_0/ADCA1I0	AP1_0
AP1_1/ADCA1I1	AP1_1
AP1_2/ADCA1I2	AP1_2
AP1_3/ADCA1I3	AP1_3
AP1_4/ADCA1I4	AP1_4
AP1_5/ADCA1I5	AP1_5
AP1_6/ADCA1I6	AP1_6
AP1_7/ADCA1I7	AP1_7

2.6.8 Check Pin

Since all I / O ports excluding the CPU's OCD shared terminal are connected, observation of signals and signal input from the outside can be easily done. Refer to circuit diagram for signal placement.

2.6.9 Device Select

Please set the jumper pin according to the device to be mounted on the socket.

	JP5 13pin	JP6 14pin	JP7 73pin	JP8 72pin	JP9 113pin	JP10 114pin
RH850/F1KM	2-3	2-3	2-3	2-3	2-3	2-3
	capacitor	GND	capacitor	GND	GND	VCC
RH850/F1K RH850/F1L	1-2	1-2	1-2	1-2	1-2	1-2
	P11_13	P11_14	P1_6	P1_7	P9_5	P9_6

3 CPU Terminal Connection List

Please download the Excel file from the web described in the document attached to the product.